Information Systems Technician (IT)

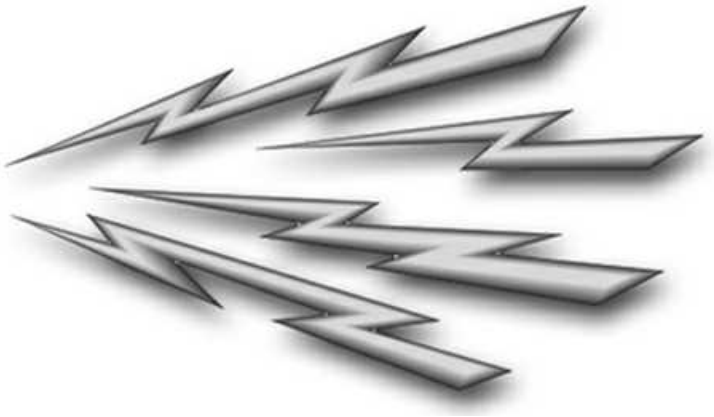

LaDR
NAVY LEARNING and DEVELOPMENT ROADMAP

November 2016

Career Roadmap

Seaman Recruit to Master Chief Roadmap

The educational roadmap below will assist Sailors in the Information Systems Technician community through the process of pursuing professional development and advanced education using various military and civilian resources e.g. PQS program; JST/SMART Transcript; NKO (E-Learning); Navy College; etc. Successful leadership is the key to military readiness and will always require a high degree of technical skill, professional knowledge, and intellectual development.

What is a Career Roadmap for Information Systems Technician?

Information Systems Technician roadmaps are just what the name implies - a roadmap through the Enlisted Learning and Development Continuum from Seaman Recruit through Master Chief. The principal focus is to standardize a program Navy wide by featuring the existing skills necessary to be successful in the Navy. The ultimate goal of a roadmap is to produce a functional and competent Sailor.

What is the Enlisted Learning and Development Continuum?

Enlisted Learning and Development Continuum is the formal title given to the curriculum and process building on the foundation of Sailorization beginning in our Delayed Entry Program through Recruit Training Command and throughout your entire career. The continuum combines skill training, professional education, well-rounded assignments, and voluntary education. As you progress through your career, early-on skill training diminishes while professional military education gradually increases. Experience is the ever-present constant determining the rate at which a Sailor trades skill training for professional development.

Do Sailors have to follow the Roadmap?

Yes. The Information Systems Technician roadmap includes the four areas encompassed by the Continuum in Professional Military Education to include; Navy Professional Military Education (NPME), Joint Professional Education (JPME), Leadership and Advanced Education.

Some training and education is mandatory (Recruit Training, IT “A” School at the Center For Information Dominance located in Pensacola, Florida, NKO (E-Learning, etc.)). Some may be directed by your chain of command (Microsoft Excel and PowerPoint courses), and the remainder is voluntary (NKO, E-Learning, college courses, etc.). Sailors are advised to seek out mentors, including your Command Master Chief, Senior Enlisted Advisor, Leading Chief Petty Officer, Leading Petty Officer and Command Career Counselor, and to make use of your Base Navy College or Education Office vast resources. All are uniquely qualified to help you along the way.

United States Navy Ethos

We are the United States Navy, our Nation's sea power - ready guardians of peace, victorious in war.

We are professional Sailors and Civilians - a diverse and agile force exemplifying the highest standards of service to our Nation, at home and abroad, at sea and ashore.

Integrity is the foundation of our conduct; respect for others is fundamental to our character; decisive leadership is crucial to our success.

We are a team, disciplined and well-prepared, committed to mission accomplishment. We do not waver in our dedication and accountability to our Shipmates and families.

We are patriots, forged by the Navy's core values of Honor, Courage and Commitment. In times of war and peace, our actions reflect our proud heritage and tradition.

We defend our Nation and prevail in the face of adversity with strength, determination, and dignity.

We are the United States Navy.

The Sailor's Creed

I am a United States Sailor.
I will support and defend the Constitution of the United States of America and I will obey the orders of those appointed over me.
I represent the fighting spirit of the Navy and those who have gone before me to defend freedom and democracy around the world.
I proudly serve my country's Navy combat team with Honor, Courage, and Commitment.
I am committed to excellence and the fair treatment of all.

IT CAREER PATH
(SW/AW/EXW/IDW)

Information Systems Technicians. IT's provide the critical communications link between ships at sea and units ashore. Execute information transfer with state-of-the-art multi-media technology such as fiber optics digital microwave and tactical and commercial satellites on a global basis. Operate, manage, and provide hardware and software support to Automated Information Systems (AIS) to include: mainframes, microcomputers, Local Area Networks, Wide Area Networks, and telecommunication systems. Apply diagnostic and restoration techniques utilizing knowledge of electronic and operation system theory. Advise on capabilities, limitations, and condition of equipment; implement production control procedures including input/output quality control support; implement and monitor security procedures; perform assigned mission organizational level maintenance and repair of Command, Control, Communication, Computer, and Intelligence Systems.

YEARS OF SERVICE	CAREER MILESTONES	AVERAGE TIME TO PROMOTE	COMMISSIONING OR OTHER SPECIAL PROGRAMS	SEA/SHORE FLOW	TYPICAL CAREER PATH DEVELOPMENT
26-30	ITCM	21.1 Yrs	CMC	36	4th CONUS Tour Billet: ISSM/SEL/CMC. Duty: Command SEL/CMC.
23-26	ITCM ITCS	21.1 Yrs 16.9	CMC, CSC	36	4th OCONUS Tour Billet: CMC/SEA/Dept LCPO. Duty: Afloat Unit (CVN) Afloat Staff, OCONUS NCTAMS/NCTS/NIOC. Qualification: CMC.
20-23	ITCM ITCS ITC	21.1 Yrs 16.9 12.8	CWO, CMC, CSC	36	3rd CONUS Tour Billet: SEA/Dept LCPO/ISSM. Duty: Staff Duty/NCTAMS/NCTS/NIOC/ CID/Spec War. Qualification: CMC/CSC.
16-20	ITCS ITC IT1	16.9 Yrs 12.8 8.7	LDO, CWO, OCS, MECP, CSC, RTC	36	3rd OCONUS Tour Billet: Dept or Div LCPO/LPO /ISSM/JTF Spectrum Mgmt (NEC 2302). Duty: Diverse Afloat Platform/ Afloat Staff/Sea Special Programs/OCONUS NCTAMS/ NCTS/NIOC. Qualification: CSC.
12-16	ITCS ITC IT1	16.9 Yrs 12.8 8.7	LDO, CWO, OCS, MECP, CSC, RTC	36	2nd CONUS Tour Billet: Instructor/Div LCPO/ LPO/ ISSM (NEC 2779), Frequency Manager (NEC 2301). Duty: NCTAMS/NCTS/NIOC CID/ATG/Operational Staff/NCU. Qualification: Warfare, MTS.
YEARS OF SERVICE	**CAREER MILESTONES**	**AVERAGE TIME TO PROMOTE**	**COMMISSIONING OR OTHER SPECIAL PROGRAMS**	**SEA/SHORE FLOW**	**TYPICAL CAREER PATH DEVELOPMENT**

IT CAREER PATH
(SW/AW/EXW/IDW)

YEARS OF SERVICE	CAREER MILESTONES	AVERAGE TIME TO PROMOTE	COMMISSIONING OR OTHER SPECIAL PROGRAMS	SEA/SHORE FLOW	TYPICAL CAREER PATH DEVELOPMENT
8-12	ITC IT1 IT2	12.8 Yrs 8.7 3.7	LDO, RTC, MECP	48/36	2nd OCONUS Tour Billet: LCPO/LPO/WCS/Comm Support Tech/AIS Advanced Network Analyst (2781)/ Network Security & Vulnerability Tech (2780)/ NSW Comm Tech (NEC 9613). Duty: Afloat Unit/OCONUS NIOC/NCTS/Spec War/NCU. Qualification: Warfare (unit specific).
4-8	IT1 IT2 IT3	8.7 Yrs 3.7 2.4	STA-21, OCS, MECP	42/36	1st CONUS Tour Billet: WCS/Tech Control/AIS Help Desk (NEC 2379)/Tactical Suport Comms (NEC 2375)/ SYSADM (NEC 2791). Duty: NCTAMS/NCTS/NIOC/NCU. Qualification: Warfare (unit specific).
1-4	IT2 IT3	3.7 Yrs 2.4	Naval Academy, NROTC	42/36	1st Afloat/OCONUS Tour Billet: Tech Control/ADP/ Transmission System Tech (NEC 2379)/GCCS-M 4.X/ 4.0.3 (NEC 2710/2766). Duty: Afloat Unit/OCONUS NCTAMS/NCTS/ NIOC. Qualification: Warfare (unit specific).
1+/-	IT3 ITSN ITSR Accession Training	9 Months			Recruit Training and all schools or training events required to be completed prior to reporting to their first operational command.
YEARS OF SERVICE	**CAREER MILESTONES**	**AVERAGE TIME TO PROMOTE**	**COMMISSIONING OR OTHER SPECIAL PROGRAMS**	**SEA/SHORE FLOW**	**TYPICAL CAREER PATH DEVELOPMENT**

Notes:

1. While there are many challenging assignments in the IT community, deployable Naval Special Warfare support assignments continue to be the most arduous. These assignments count as sea duty due to their high OPTEMPO environment. These billets are in support of the Naval Special Warfare Development Group, SEAL teams, NSW Units, Special Boat Units, and EOD Units.

2. Sea duty assignments are also demanding and provide IT Sailors with a more conventional career path. Traditional career enhancing sea duty tours should include leadership positions such as LPO, department/division LCPO, Numbered Fleet Staff/Strike Group Staff. Challenging command-level collaterals and other qualifications that support command mission, and a diversity in platforms should also be taken into consideration.

3. Career enhancing shore tours should be positions in which enlisted leaders develop subordinates and mentor them in proper career progression with emphasis on continuing technical and leadership development. IT leadership-intensive shore duty billets are CID LCPO, Rating Assignments Detailer, NCTAMS/NCTS LCPO, NIOC, NSW support, and Staff duty.

Information Systems Technician (IT)

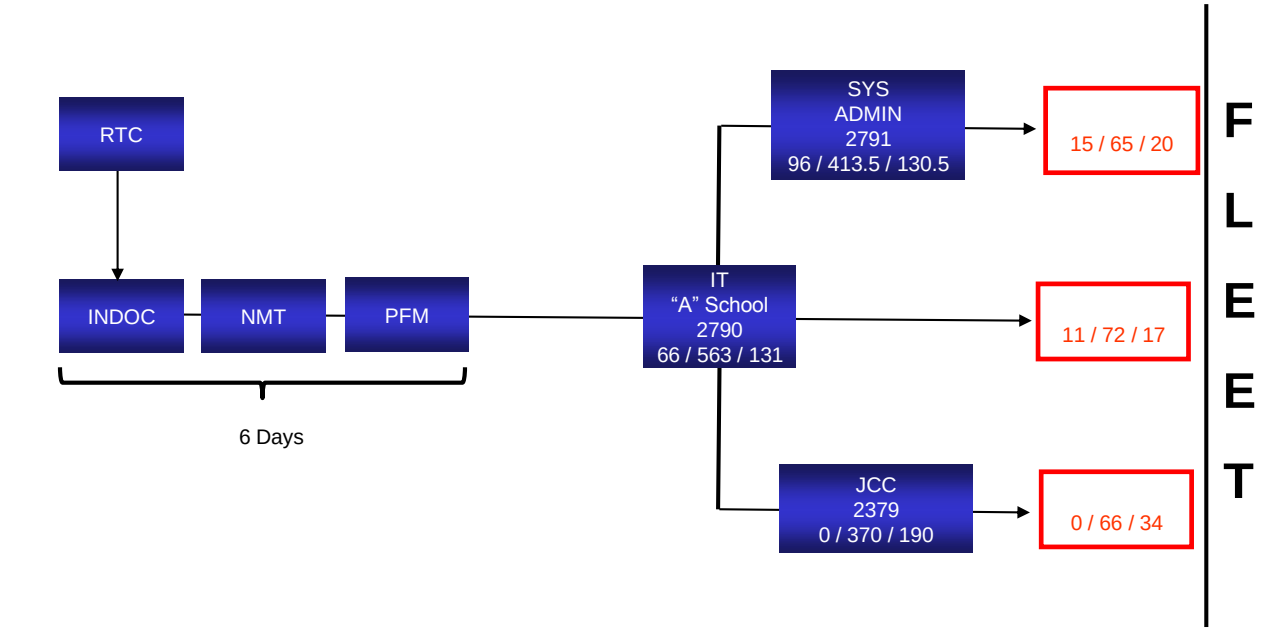

Course
HOURS: IMI / ILT / Lab

% IMI / ILT / Lab

UNCLASSIFIED

FINAL – v10 – 30 Jan 15

Information Systems Technician
Seaman Recruit to Seaman

NAME_____

SKILL TRAINING

(Schools, courses and assignments directly related to occupation)

REQUIRED SKILL TRAINING

Course Title	Course Location	CIN/CSE ID	Course Length	Date Completed
Information Systems Technician A School (2790); (4 year obligation)	Pensacola, FL	A-202-2100	19 weeks	

RECOMMENDED SKILL TRAINING

Course Title	Course Location	CIN/CSE/ACE ID	Course Length	Date Completed
Information System Technician Training Series Module 01 Administration and Security	Non Resident Training Course	NAVEDTRA 14222	Self-paced	
Information System Technician Training Series Module 02 Computer Systems	Non Resident Training Course	NAVEDTRA 14223	Self-paced	
Information System Technician Training Series Module 03 Network Communications	Non Resident Training Course	NAVEDTRA 14224	Self-paced	
Information System Technician Training Series Module 04 Communication Hardware	Non Resident Training Course	NAVEDTRA 14225A	Self-paced	
Information System Technician Training Series Module 05 Communication Center Operations	Non Resident Training Course	NAVEDTRA 14226	Self-paced	
Digital Wideband Transmission System (DWTS) Operator	Norfolk, VA / San Diego, CA	A-260-0360	4 days	
Digital Modular Radio(DMR)	Norfolk, VA / San Diego CA	A-260-1955	4 days	
High Frequency Radio Group (HFRG)	San Diego, CA	A-260-0051	10 days	
Commercial Broadband Satellite Program (CBSP) Unit Level/ Force Level or Small Ship variant operator.	Norfolk, VA / San Diego, CA	A-260-0163 / A-260-0165	12 days	

NAVY ENLISTED CLASSIFICATION CODE (NEC) OPPORTUNITIES

Course Title	Course Location	CIN/CSE/ACE ID	Course Length	Date Completed
2791 - System Administrator; 6 year obligation	Virginia Beach, VA / Groton, CT / Pensacola, FL / San Diego, CA	A-150-1980	18 weeks 90 Instructional Days	
2379 - Journeyman Communication Course; 6 Year Obligation	Pensacola, FL San Diego, CA Norfolk, VA	A-260-0061	96 days	

JOB DESCRIPTION

The IT Technician is comprised of personnel who perform core and specialty functions of Network Administration, Communications Operations and Message Processing.

In the area of **Network Administration**, IT Technicians provide technical assistance to computer system users. They answer questions and/or resolve computer problems for clients. IT Technicians provide assistance concerning the use of computer hardware and software, including printing, installation, word-processing, electronic mail, and operating systems. They conduct help desk functions and repair fiber optics and a variety of cables. Additionally, IT Technicians conduct day-to-day operations such as system backups and restores, and add, modify, or delete user accounts. They install operating systems, applications and peripherals, troubleshoot user problems, debug command language scripts, and assist the Information Systems Security Officer (ISSO) in access control security (i.e., passwords, access and control lists, etc).

They may also perform advanced Network operations, administration, maintenance and training. IT Technicians analyze, design, test, and evaluate network systems, Internet, Intranet, and other data communications systems. They perform network modeling, analysis, and planning. They research and recommend network and data communications hardware and software solutions. IT Technicians may also perform Network Enterprise Architecture | Cyber Security. They defend Navy networks from cyber threats utilizing hardware/software defense in depth methodology to prevent cyber-attacks.

In the area of **Communications Operations**, IT Technicians establish, monitor, and maintain radio frequency (RF) communications systems both ashore and afloat. Specifically, they plan, coordinate establishment, monitor, troubleshoot, and restore classified and unclassified RF communication systems that support exchange of voice, data, video and imagery using terrestrial or satellite VLF, LF, MF, HF, VHF, UHF, SHF and EHF frequency spectrums afloat and ashore. Additionally, specialists in this area may perform spectrum management - coordinate and generate frequency assignments for use within an area of responsibility, assess the impact of new frequency requirements upon the existing radio frequency environment, maintain a history of interference incidents and frequency employment files, initiate action as appropriate to prevent and/or correct harmful interference, and resolve joint and space interference.

In the area of **Message Processing**, IT Technicians provide message handling, storage, and retrieval of incoming and outgoing messages afloat and ashore. They maintain connectivity between shipboard LAN and message delivery systems ashore. They administer user profiles, and maintain directory information trees. IT Technicians operate the Message Systems, NAVMACS, and other automated message processing systems.

RECOMMENDED BILLET ASSIGNMENTS

The Information System Technician of the 21st century operate and maintain the Navy's global satellite telecommunications systems, mainframe computers, local and wide area networks, and micro-computer systems used in the fleet. Administrative support is also provided with the operation of automated equipment that keeps records of personnel training, disbursement, health, assignments and promotions within the Navy. They ensure the all-important communications link between units at sea and stations ashore. Work as a publication clerk, media clerk; help desk technician, and network operator for shore and afloat commands.

PRIORITY ASSIGNMENT: Sea Tour Any Platform

BILLET ASSIGNMENT AFLOAT 4 YEAR SAILOR: 2790 NEC. IAT Level I with A+ Certification. Communication Center Operator, Automated Data Processor Operator, Electronic Data Processor Operator

BILLET ASSIGNMENT AFLOAT 6 YEAR SAILOR: 2791 NEC. IAT Level II with Security + Certification. Administer networked systems with focus in the following functional areas: 1. Configuration Management: Manage changes, additions, and deletions to network system configurations. 2. System Management: Administration of network services, maintaining user accounts, access rights, and directory services. 3. Performance Management: Maintain system reliability statistics, performance checking of system communications pathways, and optimization of system and application performance.

BILLET ASSIGNMENT AFLOAT 6 YEAR SAILOR: 2379 NEC. Operate external communications suites in the High Frequency (HF), Very High Frequency (VHF), Ultra High Frequency (UHF), Super High Frequency (SHF), Extremely High Frequency (EHF) Radio Frequency (RF) spectrums, and the Automated Digital Network System (ADNS) for controlling RF assets, in accordance with standard operating procedures and appropriate technical documentation, during all conditions of readiness, with limited supervision.

SUBSEQUENT ASSIGNMENT: Shore Tour (NCTAMS, NCTS, TSC)

BILLET ASSIGNMENT ASHORE: Communication Center Operator, Automated Data Processor, Fleet Network Operation Center, C2 (Command & Control)

PERSONAL AND PROFESSIONAL DEVELOPMENT (Completed at reporting 30 day Career Development Board)

Command Address: _____ QD Phone Number: _____

_____

Division Officer: _____ Phone Number: _____

Leading Chief Petty Officer: _____ Phone Number: _____

Leading Petty Officer: _____ Phone Number: _____

Sponsor/Mentor: _____ Phone Number: _____

Depart/Division Career Counselor: _____ Phone Number: _____

ADSD: _____ REPORT DATE: _____ EAOS: _____ PRD: _____ SEA / SHORE: _____/____
PAYGRADE E1/E2 (9 months time in service required for advancement to E-2 and E-3)
PAYGRADE E3 (6 months time in service required to be eligible for advancement to E-4)

Date Advanced: _____ Eligible Advancement Date: _____ Number of times up: _____ HYT Date: _____

Security Clearance Level: _____ Date Last updated: _____ Command INDOC complete: _____

CAREER DEVELOPMENT BOARDS: Use OPNAVINST 1040.11(ser) & Career Counselor Handbook NAVPERS 15878
Reason for Convening/Discussion Items: (Upon completion update (CIMS) Career Information Management System)

Reporting (within 30 days for active duty or three drill weekends for SELRES) (Date Conducted): _____

6 Month: _____ 12 Month: _____ 24 Month: _____36 Month: _____48 Month: _____

60 Month: _____ Special Program: _____ Member Request: _____

HYT 24 months (Date): _____ HYT 12 months (Date): _____ HYT Waiver Date: _____Approve/Disapprove

Career Waypoint 15 months to EAOS: _____ Career Waypoint not approved: _____ CMS/ID 13 months to PRD: _____

Rating Conversion: _____ Navy Formal Training Schools Request ("A"/"C"etc): _____

Transfer: _____ Early Separation: _____ Career Status Bonus (election message received):_____

Physical Fitness Test Failure: _____

Advancement Center: Visit NKO Navy Advancement page located under the Career Management Tab
(Items to collect/discuss: Bibliography for Advancement, Enlisted Advancement Exam Strategy Guide, Profile Sheets)

Pass Not Advanced (PNA) 3 times: _____ Standard Score 40 or less/failed: _____

Enlisted to Officer Commissioning Program Application & Administration Manual OPNAVINST 1420.1(series):

Commissioning Programs Applications: _____ (prior to submission, command endorsement):_____

Seaman to Admiral 21 (STA-21) _____ Medical Enlisted Commissioning Program (MECP) _____

Naval Academy _____ Naval Academy Preparatory School (NAPS) _____Officer Candidate School _____

Navy Leader Planning Guide: Log on to NKO and select the Leadership Tab to access this guide.

QUALIFICATIONS AND CERTIFICATIONS

Sea/Shore General Qualifications **Watch Standing Qualifications**	**Report Date**	**Completion Date** **(If qualification is not required place N/A in this Block)**
Ship Board Fire Fighting		
Aviation Fire Fighting		
Basic Damage Control		
Advanced Damage Control		
3M 301 Maintenance Person		
3M 302 Repair Parts/Supply Petty Officer		
3M 303 Work Center Supervisor		
3M 304 LCPO/Division Officer		
Messenger of the Watch (MOOW)		
Petty Officer of the Watch (POOW)		
Personal Qualifications Standard		

Mandatory warfare qualification for enlisted Sailors assigned to designated warfare qualifying commands:

Warfare qualification programs	**Report Date**	**Completion Date** **(If qualification is not required place N/A in this Block)**
Aviation Warfare Specialist		
Expeditionary Warfare Specialist		
Parachute Jumper		
Fleet Marine Forces		
Information Dominance Warfare Specialist		
SEABEE Combat Warfare		
Surface Warfare Specialist		

Rate Specific/Department Qualifications (Add)	**Report Date**	**Completion Date** **(If qualification is not required place N/A in this Block)**

CERTIFICATIONS

The following post military occupations are similar to the IT-Information Systems Technician Rating. For more information about these occupations, visit NAVY COOL at https://www.cool.navy.mil/usn/.

Occupation (Civilian Employer)
Broadcast Technicians
Computer and Information Systems Managers
Computer Network Architects
Computer Network Support Specialists
Computer Operators
Computer Programmers
Computer Systems Analysts
Computer User Support Specialists
Computer, Automated Teller, and Office Machine Repairers
Database Administrators
Electronics Engineering Technicians
Information Security Analysts
Information Technology Project Managers
Inspectors, Testers, Sorters, Samplers, and Weighers
Network and Computer Systems Administrators
Radio Operators
Radio, Cellular, and Tower Equipment Installers and Repairers
Telecommunications Engineering Specialists
Telecommunications Equipment Installers and Repairers, Except Line Installers

Occupation (Federal Employer)
0132 - Intelligence Series
0335 - Computer Clerk and Assistant Series
0394 - Communications Clerical Series
2210 - Information Technology Management Series
2608 - Electronic Digital Computer Mechanic
9944 - Electronics Technician

Navy COOL: The following certifications and licenses are applicable to the IT-Information Systems Technician rating. *They may require additional education, training or experience.*

Target paygrade	Certifying Agency	Credential Title	Date Completed
E5	American Board for Certification in Homeland Security (ABCHS)	Certified in Homeland Security Level V (CHS-V)	
E4	AXELOS	ITIL Foundation Level	
E5	Cisco Systems, Inc.	Cisco Certified Design Associate (CCDA)	
E6	Cisco Systems, Inc.	Cisco Certified Design Professional (CCDP)	
E4	Cisco Systems, Inc.	Cisco Certified Entry Networking Technician (CCENT)	
E5	Cisco Systems, Inc.	Cisco Certified Network Associate (CCNA) Routing and Switching	
E4	Cisco Systems, Inc.	Cisco Certified Network Associate (CCNA) Security	
E6	Cisco Systems, Inc.	Cisco Certified Network Professional (CCNP) Routing and Switching	
E5	Cisco Systems, Inc.	Cisco Cybersecurity Specialist	
E3	Computing Technology Industry Association (CompTIA)	CompTIA A+ ce	
E7	Computing Technology Industry Association (CompTIA)	CompTIA Advanced Security Practitioner (CASP) ce	
E4	Computing Technology Industry Association (CompTIA)	CompTIA Linux+ Powered by LPI	
E4	Computing Technology Industry Association (CompTIA)	CompTIA Network+ ce	
E4	Computing Technology Industry Association (CompTIA)	CompTIA Security+ ce	
E5	Computing Technology Industry Association (CompTIA)	CompTIA Server+	
E3	Electronics Technicians Association, International (ETA-I)	Apprentice (APP)	
E4	Electronics Technicians Association, International (ETA-I)	Fiber Optics Installer (FOI)	
E5	Electronics Technicians Association, International (ETA-I)	Fiber Optics Technician (FOT)	
E3	Electronics Technicians Association, International (ETA-I)	General Communications Technician - Level 1 (GCT1)	
E6	Global Information Assurance Certification (GIAC)	GIAC Certified Incident Handler (GCIH)	
E7	Global Information Assurance Certification (GIAC)	GIAC Certified Intrusion Analyst (GCIA)	
E7	Global Information Assurance Certification (GIAC)	GIAC Global Industrial Cyber Security Professional (GICSP)	
E7	Global Information Assurance Certification (GIAC)	GIAC Information Security Fundamentals (GISF)	
E5	Global Information Assurance Certification (GIAC)	GIAC Security Essentials Certification (GSEC)	
E7	Global Information Assurance Certification (GIAC)	GIAC Security Expert (GSE)	
E6	Global Information Assurance Certification (GIAC)	GIAC Security Leadership Certification (GSLC)	
E6	Information Systems Audit and Control Association (ISACA)	Certified Information Security Manager (CISM)	
E6	Information Systems Audit and Control Association (ISACA)	Certified Information Systems Auditor (CISA)	
E5	International Association of Privacy Professionals (IAPP)	Certified Information Privacy Technologist (CIPT)	
E5	International Information Systems Security Certification Consortium, Inc. ((ISC)2)	Associate of ISC2	
E7	International Information Systems Security Certification Consortium, Inc. ((ISC)2)	Certified Information Systems Security Professional (CISSP)	
E5	International Information Systems Security Certification Consortium, Inc. ((ISC)2)	Systems Security Certified Practitioner (SSCP)	
E4	Microsoft Corporation	Microsoft Certified IT Professional (MCITP)	
E3	Microsoft Corporation	Microsoft Certified Professional (MCP)	
E5	Microsoft Corporation	Microsoft Certified Solutions Associate (MCSA): Windows 8	
E5	Microsoft Corporation	Microsoft Certified Solutions Associate (MCSA): Windows Server 2008	
E5	Microsoft Corporation	Microsoft Certified Solutions Associate (MCSA): Windows Server 2012	
E6	Microsoft Corporation	Microsoft Certified Solutions Expert (MCSE): Server Infrastructure	
E4	Microsoft Corporation	Microsoft Certified Technology Specialist (MCTS)	
E5	Microsoft Corporation	Microsoft Certified Trainer (MCT)/Learning Consultant (MCLC)	
E5	Microsoft Corporation	Microsoft Technology Associate (MTA)	
E6	Oracle Corporation	Oracle Certified Professional, Oracle Solaris 10 System Administrator	
E4	Transportation Security Administration	Transportation Worker Identification Credential (TWIC)	

Visit Navy COOL at https://www.cool.navy.mil/usn/ for additional Credentials that you may qualify to earn; however funding may be limited to your GI Bill.

UNITED SERVICES MILITARY APPRENTICESHIP PROGRAM (USMAP):

Rank	Apprenticeship	Date Completed
E1 - E9	Computer Operator	
E1 - E9	Computer Programmer (Professional & Kindred)	
E1 - E9	Electronics Mechanic	
E1 - E9	Electronics Mechanic (Any Industry)	
E1 - E9	Electronics Tester	
E1 - E9	Internetworking Technician	
E1 - E9	Radio Station Operator (Aircraft Mfg)	

Visit USMAP https://usmap.netc.navy.mil/usmapss/static/index.htm for additional information.

STAY NAVY

REENLIST / EXTEND: Request Chit/Form: _____ Career Waypoints-Reenlistment Approval: _____

Selective Training and Reenlistment (STAR): _____ Guaranteed Assignment in Detailing (GUARD 2000): _____

School as a Reenlistment Incentive: _____ Prior Service Reenlistment Eligibility - Reserve (PRISE-R):_____

Career Management System/Interactive Detailing (CMS/ID): _____

Medical/Dental Screening: _____ Command Recommendation (evaluation): _____ Bonus: _____ Ceremony: _____

Career Waypoints-Reenlistment:

The Command Career Counselor is your local advocate to assist you with the Career Waypoints application process.

- E3-E6 Sailors with less than 14 years of service must submit a Career Waypoint application, regardless of reenlistment intentions. Sailors who do not desire to reenlist will submit an "intends to separate" application. Sailors not eligible for reenlistment will submit a "not eligible" application.
- The Career Waypoints system automatically generates most of the applications needed by Sailors. Applications must be submitted no later than 13 months prior to expiration of active obligated service (EAOS) or as extended (SEAOS). Sailors with less than 24 months of contract time remaining at their projected rotation date (PRD) will submit an application 12 months prior to their PRD. In either case, the Career Waypoints system will automatically generate applications for Sailors 15 months prior to either timeframe. Applications required outside of the established C-Way gates can be submitted as Special Circumstance applications. Examples of when these may be needed include OBLISERVE for special duty, decommissioning or homeport shift.
- The C-Way 3-2-1 Process aligns career decisions with the detailing process. Soft End of Active Obligated Service (SEAOS)/End of Active Obligated Service (EAOS) applications are created by C-Way at the 15 month from SEAOS/EAOS mark and must be submitted by the Command Career Counselor at the 13 month mark. This provides time for the Career Counselor to validate the Sailor's information and to ascertain the Sailors career intentions. The first C-Way review gate occurs from 13 to 10 months from SEAOS/EAOS with career choice options of in-rate, conversion, and Selected Reserve. The second review gate occurs from 9 to 7 months from SEAOS/EAOS with career choice options of conversion and Selected Reserve. From 6 months to 3 months to SEAOS/EAOS the Sailor can only choose Selected Reserve affiliation.
- Monthly reenlistment quotas are limited and must be reserved for our best and brightest Sailors who desire to Stay Navy.
  Sailors must choose one of the following based on their desires and qualifications:
  - Reenlist-in-Rate,
  - Reenlist-in-rate, Willing to Convert
  - Convert only
  - SELRES option
  - Intend to separate
  - Not eligible

In February 2014, C-Way delivered auto-approval capabilities to provide reenlistment decisions on SEAOS/EAOS applications more quickly for eligible ratings. This changed the monthly processing of reenlistment applications as described below.

- If you are in an, "open" rating or a "balanced" rating in an undermanned year group or an E-6, you are eligible for reenlistment, and your application is submitted with correct data it will be auto-approved and returned immediately, and you can reenlist.
- If you are in a "competitive" rating or a balanced rating but not an undermanned year group, then your application will be processed through the monthly Rack and Stack process. Applications submitted in one month are processed in Rack and Stack the following month.
- For Nuclear ratings, all applications are reviewed by enlisted community managers on an ongoing basis throughout the processing month.
- If required data is missing (evaluations, Physical Fitness Assessment (PFA) data, security clearance etc.) the application will be denied with a note to your career counselor regarding what needs to be fixed. It is critical the Command Career Counselor reviews these notes to ensure Sailor's are not disadvantaged in their opportunities for retention.

- Upon completion of the monthly process, Career Waypoints results will be available to command users via the Monthly report section of the Career Waypoints system.
- Additional guidance MILPERSMAN 1440-060, NAVADMIN 149/13, NAVADMIN 150/13, and your Career Counselor

TRANSFER:

15 Months	12 Months	9 Months	6 Months	Orders Received
Career Waypoint____	Career Waypoint____	Career Waypoint____	Accept Orders_____	Screening_____
Exception Family Member___	EFM_____	CMS/ID_____	Reverse Sponsor_____	Obligate_____
CMS/ID_____	CMS/ID_____	SRB_____	Relocation (FFSC) ____	Bonus_____
Continuous Overseas Tours (COT) _____			Medical/Dental_____	
Overseas Tour Extension Incentive Program (OTEIP) _____			SRB_____	

For additional assistance in transfer and relocation, go to the Military HOMEFRONT website: http://www.public.navy.mil/bupers-npc/Pages/default.aspx and visit your Fleet and Family Support Center on base.

SEPARATING/RETIRE:

18 -12 months	6 months	90 days	30 days
Transition GPS _____	MED/DEN _____	Copy of Records_____	Copy of Records _____
Complete DD2648PSD_____	Relocation _____	Microfiche CD_____	PSD_____
Transition Planning_____	Relocation Services (FFSC) _____	Arrange Ceremony_____	MED/DEN _____
	Reserve Affiliation_____	Request Leave / PTDY _____	
	VA/DVA_____		

PHYSICAL FITNESS:

Participate in a year-round physical fitness program to meet Navy fitness and BCA standards. Review and verify accuracy of PFA data in PRIMS within 60 days of the PFA cycle. (PRIMS is accessible through your BUPERS Online Account)

Height_____ Weight_____ If Required (Neck_____ Waist_____ Hips (Female) _____ BCA _____)

Last 2 PRT Cycles: Curl-ups_____/_____ Push-ups_____/_____ Run/Swim/Cardio_____/____ Overall Score_____/_____

List date (if) any PRT/BCA failure(s) over the last 5 years _____/_____ List if any Medical Waiver(s)_____/_____

For more information on Navy Fitness, visit: http://www.navyfitness.org/

PROFESSIONAL MILITARY EDUCATION

(Resident and non-resident coursework designed to enhance a Sailor's general military professional knowledge and abilities)

EDUCATION: (Prior to considering any pursuit of off duty education or program enrollment VISIT YOUR NAVY COLLEGE OFFICE or call the Virtual Education Center (VEC)!!!)

Education Plan Completed (Navy College Office/VEC _____Current Education Level_____

Degree Goal_____
Various distance learning degree options are available using, Sailor and Marine Online Academic Advisor (SMOLAA)

Goal: Date: AA/AS _____ BA/BS _____ Master _____
(Credits to earn a degree - AA/AS: 60 SH/90 QH, BA/BS: 120 SH/180, QH, Master /Doctorate: Variable based on program)

Number of current credits _____ American Council on Education (ACE) recommended credits_____

SOC DNS Agreement _____ Joint Service Transcripts (JST) _____ HS Transcripts_____ College Transcripts_____

Date Degree Obtained: AA/AS _____ BA/BS _____ Master _____ Doctorate _____

For entry into JST, send official transcripts to:
Naval Education and Training Professional Development and Technology Center
Attn: JST Operation Center N615
6490 Saufley Field Road
Pensacola, FL 32509
Phone: 1-877-838-1659
Comm: 757-492-4684
FAX: 757-492-5095
DSN: 492-4684
Email: VEC@navy.mil

VOLUNTARY EDUCATION (Study guides and exam preparations and practice test located on NKO)

Academic skills _____ NCPACE _____CLEP _____DSST _____TA _____MGIB _____Post 9/11 GIB_____

E1/E2/E3 REQUIRED NAVY PME:

Course Title	Course Location	CIN/CSE ID	Course Length	Date Completed
Petty Officer Selectee Leadership Course	Command Delivered	CPPD-LEAD-09-001	24 hours	
Navy Military Training (Life Skills) (Pre-A School Delivery only) [4]	Command Delivered	A-500-1000	2 days	
Ethics Training	Command Delivered			
Required General Military Training Topics For FY 2016 (Standardized Core Training) [1]				
Antiterrorism Level I Awareness	NKO/Command Delivered	CENSECFOR-AT-010-1.0		
Combating Trafficking in Persons General Awareness	NKO/Command Delivered	DOD-CTIP-1.0		
Counterintelligence Awareness and Reporting	NKO/Command Delivered	DOD-CIAR-1.0		
Cyber Awareness Challenge V3	NKO/Command Delivered	DOD-IAA-V13.0		
Operations Security (Uncle Sam's OPSEC)	NKO/Command Delivered	NIOC-USOPSEC-2.0		
Privacy and Personally Identifiable Information	NKO/Command Delivered	DOD-PII-2.0		
Records Management	NKO/Command Delivered	DOR-RM-010-1.1		
Sexual Assault Prevention and Response Awareness (SAPR)	Command Delivered	CPPD-GMT-SAPRA-1.0 CC		
Equal Opportunity/Sexual Harassment/Grievance Procedures [2]	Command Delivered	CPPD-GMT-EOSH-1.0		
Suicide Prevention	Command Delivered	CPPD-GMT-SAP-1.0		
Required General Military Training Topics For FY 2016 (Command-Assigned Readiness –Enhancement topics; biennial periodicity) [3]				
Alcohol, Drug, and Tobacco Awareness	Command Delivered	CPPD-GMT-ADTA-1.0		
Domestic Violence Prevention and Reporting	NKO/Command Delivered	CPPD-GMT-DV-1.0		
Sexual Health and Responsibility	NKO/Command Delivered	CPPD-GMT-SHR-1.0		
Stress Management	Command Delivered	CPPD-GMT-SM-1.0		

1 - Verify GMT topics on NKO GMT web page.
2 - Course should be delivered in conjunction with SAPR. If not practicable, separate training is still required.
3 - Topics to be delivered once per deployment cycle. If deployment cycle is not applicable or exceeds two years between deployments, then deliver once every two years.
4 - Required for delivery in "A" School for all ratings

E1/E2/E3 REQUIRED COMMUNITY PME:

Course Title	Course Location	CIN/CSE ID	Course Length	Date Completed
Electronic Key Management System	NKO/PQS Page	NAVEDTRA 43462-1B	Self-paced	
Navy Radio Communications Afloat	NKO/PQS Page	NAVEDTRA 43355-2	Self-paced	
Information Assurance Technician	NKO/PQS Page	NAVEDTRA 43469	Self-paced	
Special Intelligence Afloat Communication	NKO/PQS Page	NAVEDTRA 43551-3B	Self-paced	
Information Systems and Telecommunications Clerk.	NKO/PQS Page	NAVEDTRA 43355-G		
Navy Networks	NKO/PQS Page	NAVEDTRA 43355-1		

E1/E2/E3 RECOMMENDED NAVY PME:

Course Title	Course Location	CIN/CSE ID	Course Length	Date Completed
Basic Military Requirements (NAVEDTRA 14325) (EDITION 1/1/2002)		NAVEDTRA 14325		
Military Requirements for Petty Officer Third and Second Class (EDITION 1/1/2001)		NAVEDTRA 14504		
Introductory Enlisted Professional Military Education (IEPME)	NKO	Military DON/ PME	18 hours	
Block 1 Introductory EPME - Introduction	NKO	IEPME-INTRO-B1-V2	-	
Block 2 Introductory EPME - History and Traditions	NKO	IEPME-INTRO-B2-V2	3 hours	
Block 3 Introductory EPME - Enlisted Professionalism	NKO	IEPME-INTRO-B3-V2	3 hours	
Block 4 Introductory EPME - Policy and the Navy	NKO	IEPME-INTRO-B4-V2	3 hours	
Block 5 Introductory EPME - Planning for Operations	NKO	IEPME-INTRO-B5-V2	3 hours	
Block 6 Introductory EPME - Regional and Cultural Awareness	NKO	IEPME-INTRO-B6-V2	3 hours	
Block 7 Introductory EPME - Technology in the Maritime Domain	NKO	IEPME-INTRO-B7-V2	3 hours	
Block 8 Introductory EPME - Conclusion	NKO	IEPME-INTRO-B8-V2	-	
Cultural Awareness	NKO or College Course	Foreign Language and Culture	45 hours	
English 101	College Course		45 hours	
English Reading	College Course		45 hours	
English Writing	College Course		45 hours	
Math	College Course		45 hours	
Speech	College Course		45 hours	
Navy Reserve Fundamentals for Active Duty Course	NKO	NAVRESFOR-NRF-3.0	10 hours	
Nutrition	NKO	NMHCI2107V2.1	1 hour	
Personal Financial Management	NKO	CPD-PFM-1.0	8 hours	
PREVENT	Command Delivered	S-501-0150	24 hours	
Recommended General Military Training Topics For FY 2016 (Delivery determined by command discretion) [1]				
Energy Policy	Command Delivered	OPNAV-GMTE-1.0		
Hazing Policy and Prevention	Command Delivered	CPPD-GMT-HPP-1.0		
Operational Risk Management	NKO/Command Delivered	CPPD-GMT-ORM-1.0		
Personal Financial Management	Command Delivered	CPPD-GMT-PFM16-1.0		
Physical Readiness	NKO/Command Delivered	CPPD-GMT-PRT-2.0		

1 - Verify GMT topics on NKO GMT web page.

Courses with Recommended Reserve Points:

Commander Navy Reserve Forces (CNRF) N7 determines the number of reserve points awarded for completion of a course taken on Navy E-Learning. This listing should only be used as a guide and is subject to change by direction of CNFR N7.

Navy E-Learning has no control over how many, if any, reserve points are eventually awarded for the completion of a course. All questions concerning the award of reserve points should be directed to CNFR N7.

E1/E2/E3 RECOMMENDED RESERVE PME:

Course Title	Course Location	CIN/CSE ID	Course Length	Date Completed
NROWS Orders Administration Course	NKO	R-500-0140/02PG /DoN	8 hours	
Naval Reserve Center Commanding Officer Officer In Charge	NKO	CNRFC-COOIC-1.0 /DoN	8 hours	
Guidance for Mobilization	NKO	CNRFC-GMB-1.1 /DoN	4 hours	
Military Sealift Command 101	NKO	CNRFC-MSC101 /DoN 1.1	24 hours	
Non-Prior Service Accession Program	NKO	CNRFC-NPSAP-2 /DoN 0	23 hours	

E1/E2/E3 RECOMMENDED COMMUNITY PME:

Course Title	Course Location	CIN/CSE ID	Course Length	Date Completed
Common Operating Environment (COE) Message Processor (CMP) Legacy	Navy eLearning /DON/ Navy Comm & MSG	SPAWAR-COELEG-1.0	Self-paced	
Automated Message Handling System(AMHS)	Navy eLearning /DON/ Navy Comm & MSG/ SPAWAR-AMHMS-1.0	AMHMS-1.0	Self-paced	
Common Operating Environment (COE) Message Processor (CMP)	Navy eLearning /DON/ Navy Comm & MSG/ SPAWAR_COE_1.0	SPAWAR_COE_1.0	Self-paced	
Common Message Administrator (CMA)	Navy eLearning /DON/ Navy Comm & MSG/ SPAWAR_COE_1.	SPAWAR_COE_1.	Self-paced	
Operate and Troubleshoot the KIV-7M	Navy eLearning/DON/ Navy Comm & MSG/	CRS-9631	Self-paced	

NAVY PROFESSIONAL READING PROGRAM (PRP)

The purpose of the Reading Program is to facilitate the professional and personal development of all Sailors. For additional information on changes, refer to NAVADMIN 309/12 or visit http://navyreading.dodlive.mil/ or http://navy.lib.overdrive.com/ or https://wwwa.nko.navy.mil

ESSENTIAL READING

WARFIGHTING FIRST	**Completed**
1812: The Navy's War *by George C. Daughan*	
Cybersecurity and Cyberwar: What Everyone Needs to Know *by P.W. Singer*	
SEAL of Honor *by Gary Williams*	
Leading with the Heart *by Mike Krzyzewski, Donald T. Phillips, and Grant Hill*	
The Twilight War *by David Crist*	
Wake of the Wahoo *by Forest J. Sterling*	
OPERATE FORWARD	**Completed**
The Crisis of Islam *by Bernard Lewis*	
Execute Against Japan *by LT Joel Holwitt, USN*	
Monsoon *by Robert Kaplan*	
Neptune's Inferno *by James D. Hornfischer*	
Red Star Over the Pacific *by Toshi Yoshihara and James Holmes*	
Fallout *by Catherine Collins and Douglas Frantz*	
BE READY	**Completed**
A Sailor's History of the U.S. Navy *by Thomas Cutler*	
In the Shadow of Greatness *by Joshua Welle, John Ennis, Katherine Kranz and Graham Plaster*	
Navigating the Seven Seas *by Melvin G. Williams, Sr. and Melvin G. Williams, Jr.*	
The Trident: The Forging and Reforging of a Navy SEAL Leader *by Jason Redman and John Bruning*	
Turn the Ship Around *by David Marquet*	
Wired for War *by P.W. Singer*	

Twenty-four additional books are categorized as "recommended reading," and are available as electronic books (e-books). Many can be downloaded at no cost through the Navy general library program site on Navy Knowledge On-line (NKO).

The entire list, with book summaries and additional information is available at http://navyreading.dodlive.mil/

The CNO-PRP has been streamlined to make our Navy's reading program more interactive, affordable, and wherever possible, electronically accessible. To that end: a number of the titles will be available for free at the NKO portal at https://wwwa.nko.navy.mil.

- Click on the reference tab, then e-library audio and e-books tab.
- In order to download books, an "overdrive" account is required. On the top right, click on the overdrive window and follow the prompts.
- Then, not only are the PRP books available, but also hundreds of other items.

Note: Security restrictions preclude downloading via Navy owned computers, so downloading them to personally-owned devices will be required.

E1/E2/E3 RECOMMENDED COMMUNITY READING

Title	Completed
ACP 131, Communication Instructions Operating Signals; NKO/CID/IT Home Page *by Allied Communication Publication*	
Naval Telecommunications Procedures, NTP 2 Section 2 (E), Navy Ultra High Frequency Satellite Communications; NKO/CID/IT Home Page	
Naval Telecommunications Procedures, NTP 2 Section 3 (B), Navy Extremely High Frequency Satellite Communications; NKO/CID/IT Home Page	
Naval Telecommunications Procedures, NTP 2 Section 4 (A), Navy Commercial Satellite Communication; NKO/CID/IT Home Page	
Naval Telecommunications Procedures, NTP 2 Section 5 (Oct01), Navy Satellite Communications (SATCOM) Broadcast Services; NKO/CID/IT Home Page	
Naval Telecommunications Procedures, NTP 3(K), Telecommunications Users Manual Operating Procedures; NKO/CID/IT Home Page	
Fleet Communications; NKO/CID/IT Home Page *NTP 4 (E)*	
Joint Army-Navy-Air Force Publication, JANAP 128(J), Automatic Digital Network (AUTODIN) Operating Procedures; NKO/CID/IT Home Page	
Electronic Key Management System (EKMS)	

Information Systems Technician
Petty Officer Third Class
(Apprentice/Journeyman)

NAME_____

SKILL TRAINING

(Schools, courses and assignments directly related to occupation)

REQUIRED SKILL TRAINING

Course Title	Course Location	CIN/CSE ID	Course Length	Date Completed
See initial skills training from E1-E3 section				

RECOMMENDED SKILL TRAINING

Course Title	Course Location	CIN/CSE/ACE ID	Course Length	Date Completed
Network +	COMPTIA	N10-004 /JK0-016	Self-paced	
Certified Homeland Security Level I	American Board for Certification in Homeland Security	HS1010B	Self-paced	
Certified Homeland Security Level II	American Board for Certification in Homeland Security	HS1020B	Self-paced	
Automated Digital Network System (ADNS) Family of Systems variants F and/or H	Various	A-101-1122 / A-101-1125	12 days	
End to End (Prerequisite is ADNS/ISNS/ISSM)	Norfolk VA Pearl Harbor HI San Diego CA Yokosuka, Japan Mayport, FL Everett, WA	A-150-1116	5 days	
Digital Wideband Transmission System (DWTS) Operator	Norfolk, VA / San Diego, CA	A-260-0360	4 days	
Digital Modular Radio(DMR)	Norfolk, VA / San Diego CA	A-260-1955	4 days	
High Frequency Radio Group (HFRG)	San Diego, CA	A-260-0051	10 days	
Theatre Battle Management Core System (TBMCS)	Dam Neck, VA San Diego CA,	A-531-0028	26 days	

NAVY ENLISTED CLASSIFICATION CODE (NEC) OPPORTUNITIES

Course Title	Course Location	CIN/CSE/ACE ID	Course Length	Date Completed
2710, 2765, 2766 - Global Command Control System Maritime (GCCS-M) System Administrator for 4.X/ 4.0.3/ 4.1 Family of Systems	Dam Neck, VA / San Diego, CA	A-150-0045 / A-150-3400 / A-150-3500	26 days	
2730 - Navy Tactical Command Support System (NTCSS) II Manager	VirginiaBeach,VA Groton, CT/SanDeigo, CA	A-531-0021	3 weeks 15 Instructional Days	
2791 - System Administrator	Virginia Beach, VA / Groton, CT / Pensacola, FL / San Diego, CA	A-150-1980	18 weeks 90 Instructional Days	
2375 - Tactical Support Center (TSCOMM) Operator Course	Jacksonville, FL	J-201-0816	22 days	
2379 - Journeyman Communication Course	Pensacola, FL San Diego, CA Norfolk, VA	A-260-0061	96 days	
Commercial Broadband Satellite Program (CBSP) Unit Level/ Force Level or Small Ship variant operator.	Norfolk, VA / San Diego, CA	A-260-0163 / A-260-0165	12 days	
End to End (Prerequisite is ADNS/ISNS/ISSM)	Norfolk VA Pearl Harbor HI San Diego CA Yokosuka, Japan Mayport, FL Everett, WA	A-150-1116	5 days	
Integrated Shipboard Network System (ISNS) for 3.0/3.5/4.0 Family of Systems.	Norfolk VA, San Diego CA,	W-150-0101 / W-150-0800 / W-150-0900	33 days	

JOB DESCRIPTION

The IT Technician is comprised of personnel who perform core and specialty functions of Network Administration, Communications Operations and Message Processing.

In the area of **Network Administration**, IT Technicians provide technical assistance to computer system users. They answer questions and/or resolve computer problems for clients. IT Technicians provide assistance concerning the use of computer hardware and software, including printing, installation, word-processing, electronic mail, and operating systems. They conduct help desk functions and repair fiber optics and a variety of cables. Additionally, IT Technicians conduct day-to-day operations such as system backups and restores, and add, modify, or delete user accounts. They install operating systems, applications and peripherals, troubleshoot user problems, debug command language scripts, and assist the Information Systems Security Officer (ISSO) in access control security (i.e., passwords, access and control lists, etc).

They may also perform advanced Network operations, administration, maintenance and training. IT Technicians analyze, design, test, and evaluate network systems, Internet, Intranet, and other data communications systems. They perform network modeling, analysis, and planning. They research and recommend network and data communications hardware and software solutions. IT Technicians may also perform Network Enterprise Architecture | Cyber Security. They defend Navy networks from cyber threats utilizing hardware/software defense in depth methodology to prevent cyber-attacks.

In the area of **Communications Operations**, IT Technicians establish, monitor, and maintain radio frequency (RF) communications systems both ashore and afloat. Specifically, they plan, coordinate establishment, monitor, troubleshoot, and restore classified and unclassified RF communication systems that support exchange of voice, data, video and imagery using terrestrial or satellite VLF, LF, MF, HF, VHF, UHF, SHF and EHF frequency spectrums afloat and ashore. Additionally, specialists in this area may perform spectrum management - coordinate and generate frequency assignments for use within an area of responsibility, assess the impact of new frequency requirements upon the existing radio frequency environment, maintain a history of interference incidents and frequency employment files, initiate action as appropriate to prevent and/or correct harmful interference, and resolve joint and space interference.

In the area of **Message Processing**, IT Technicians provide message handling, storage, and retrieval of incoming and outgoing messages afloat and ashore. They maintain connectivity between shipboard LAN and message delivery systems ashore. They administer user profiles, and maintain directory information trees. IT Technicians operate the Message Systems, NAVMACS, and other automated message processing systems.

RECOMMENDED BILLET ASSIGNMENTS

The Information System Technician of the 21st century operate and maintain the Navy's global satellite telecommunications systems, mainframe computers, local and wide area networks, and micro-computer systems used in the fleet. Administrative support is also provided with the operation of automated equipment that keeps records of personnel training, disbursement, health, assignments and promotions within the Navy. They ensure the all-important communications link between units at sea and stations ashore. Work as a publication clerk, media clerk, help desk technician, and network operator for shore and afloat commands.

PRIORITY ASSIGNMENT: Sea Tour Any Platform, Special Warfare, Navy Expeditionary Warfare

BILLET ASSIGNMENT AFLOAT 4 YEAR SAILOR: Communication Center Operator, Automated Information Systems Operator, Electronic Data Processor Operator, Ships Signals Exploitation Space Communications

BILLET ASSIGNMENT AFLOAT 6 YEAR SAILOR: Automated Information Systems Operator

SUBSEQUENT ASSIGNMENT: Shore Tour (NCTAMS, NCTS, Tactical Support Center , NIOC, Special Warfare), Navy Expeditionary Warfare

BILLET ASSIGNMENT ASHORE: Communication Center Operator, Automated Information Systems Operator, Fleet Network Operation Center, C2 (Communication Control)

PERSONAL AND PROFESSIONAL DEVELOPMENT (Completed at reporting 30 day Career Development Board)

Command Address: _____ QD Phone Number: _____

_____

Division Officer: _____ Phone Number: _____

Leading Chief Petty Officer: _____ Phone Number: _____

Leading Petty Officer: _____ Phone Number: _____

Sponsor/Mentor: _____ Phone Number: _____

Depart/Division Career Counselor: _____ Phone Number: _____

ADSD: _____ REPORT DATE: _____ EAOS: _____ PRD: _____ SEA / SHORE: _____/____
PAYGRADE E4 (1 year time in service required to be eligible for advancement to E-5)

Date Advanced: _____ Eligible Advancement Date: _____ Number of times up: _____ HYT Date: _____

Security Clearance Level: _____ Date Last updated: _____ Command INDOC complete: _____

CAREER DEVELOPMENT BOARDS: Use OPNAVINST 1040.11(ser) & Career Counselor Handbook NAVPERS 15878
(E4) Reason for Convening/Discussion Items: (Upon completion update (CIMS) Career Information Management System)

Reporting (within 30 days for active duty or three drill weekends for SELRES) (Date Conducted): _____

6 Month: _____ 12 Month: _____ 24 Month: _____36 Month: _____48 Month: _____

60 Month: _____ Special Program: _____ Member Request: _____

HYT 24 months (Date): _____ HYT 12 months (Date): _____ HYT Waiver Date: _____Approve/Disapprove

Career Waypoint 15 months to EAOS: _____ Career Waypoint not approved: _____ CMS/ID 13 months to PRD: _____

Rating Conversion: _____ Navy Formal Training Schools Request ("A"/"C"etc): _____

Transfer: _____ Early Separation: _____ Career Status Bonus (election message received):_____

Physical Fitness Test Failure: _____

Advancement Center: Visit NKO Navy Advancement page located under the Career Management Tab
(Items to collect/discuss: Bibliography for Advancement, Enlisted Advancement Exam Strategy Guide, Profile Sheets)

Pass Not Advanced (PNA) 3 times: _____ Standard Score 40 or less/failed: _____

Enlisted to Officer Commissioning Program Application & Administration Manual OPNAVINST 1420.1(series):

Commissioning Programs Applications: _____ (prior to submission, command endorsement):_____

Seaman to Admiral 21 (STA-21) _____ Medical Enlisted Commissioning Program (MECP) _____

Naval Academy _____ Naval Academy Preparatory School (NAPS) _____Officer Candidate School _____

Navy Leader Planning Guide: Log on to NKO and select the Leadership Tab to access this guide.

RECORD REVIEW CHECKLIST

Review your Official Record to see what documentation, qualifications, etc. may be missing or requiring an update. This is a great opportunity to meet with your Mentor, Leading Petty Officer or Leading Chief Petty Officer to understand the importance of keeping your record up-to-date. Check the following three major sections to verify your Official Record:

a. **BUPERS Online**: BUPERS Online (https://www.bol.navy.mil) is your main tool to ensure your record is up to date and helps you to be proactive in making the most of your promotion opportunity. You should review your:

   1. **Official Military Personnel File (OMPF)**: All active duty and reserve personnel having a BOL account, a CAC (with appropriate certificates) and a CAC-enabled computer can now view their OMPF online by selecting the OMPF option on the BOL main menu page. This is the preferred method of obtaining OMPF information to eliminate the unnecessary time-lags caused by waiting days or weeks to receive a requested CD ROM.

   2. **If Deployed:** Click on "*Request Record on CD*" to order your Official Military Personnel File (OMPF). This must be accomplished four to six months before a board convenes, which will allow time for delivery and updating of your record if required.

   3. Check your **Performance Summary Record (PSR)** and **Enlisted Summary Record (ESR)** on https://www.bol.navy.mil, click on the "*ODC, OSR, PSR, ESR*" link.

b. **Electronic Service Record (ESR)** Self-Service ESR: This can be viewed at (https://nsips.nmci.navy.mil) or on the Navy Standard Integrated Personnel System (NSIPS) ESR server onboard ship.

c. **Electronic Training Jacket (ETJ)**: Log-on to Navy Knowledge Online (NKO) and review your entire ETJ making sure that each section is correct. If not, clicking on "*Data Problems*" at the bottom of each page which will guide you on how to make corrections or updates.

d. **US Navy Awards website**: Log onto (https://awards.navy.mil/) to review any awards you may qualify for but were unaware of.

QUALIFICATIONS AND CERTIFICATIONS

Sea/Shore General Qualifications **Watch Standing Qualifications**	**Report Date**	**Completion Date** **(If qualification is not required place N/A in this Block)**
Ship Board Fire Fighting		
Aviation Fire Fighting		
Basic Damage Control		
Advanced Damage Control		
3M 301 Maintenance Person		
3M 302 Repair Parts/Supply Petty Officer		
3M 303 Work Center Supervisor		
3M 304 LCPO/Division Officer		
Messenger of the Watch (MOOW)		
Petty Officer of the Watch (POOW)		
Personal Qualifications Standard		

Mandatory warfare qualification for enlisted Sailors assigned to designated warfare qualifying commands:

Warfare qualification programs	**Report Date**	**Completion Date** **(If qualification is not required place N/A in this Block)**
Aviation Warfare Specialist		
Expeditionary Warfare Specialist		
Fleet Marine Forces		
Information Dominance Warfare Specialist		
Parachute Jumper		
SEABEE Combat Warfare		
Surface Warfare Specialist		

Rate Specific/Department Qualifications (Add)	**Report Date**	**Completion Date** **(If qualification is not required place N/A in this Block)**

CERTIFICATIONS

The following post military occupations are similar to the IT-Information Systems Technician Rating. For more information about these occupations, visit NAVY COOL at https://www.cool.navy.mil/usn/.

Occupation (Civilian Employer)
Broadcast Technicians
Computer and Information Systems Managers
Computer Network Architects
Computer Network Support Specialists
Computer Operators
Computer Programmers
Computer Systems Analysts
Computer User Support Specialists
Computer, Automated Teller, and Office Machine Repairers
Database Administrators
Electronics Engineering Technicians
Information Security Analysts
Information Technology Project Managers
Inspectors, Testers, Sorters, Samplers, and Weighers
Network and Computer Systems Administrators
Radio Operators
Radio, Cellular, and Tower Equipment Installers and Repairers
Telecommunications Engineering Specialists
Telecommunications Equipment Installers and Repairers, Except Line Installers

Occupation (Federal Employer)
0132 - Intelligence Series
0335 - Computer Clerk and Assistant Series
0394 - Communications Clerical Series
2210 - Information Technology Management Series
2608 - Electronic Digital Computer Mechanic
9944 - Electronics Technician

Navy COOL: The following certifications and licenses are applicable to the IT-Information Systems Technician rating. *They may require additional education, training or experience.*

Target paygrade	Certifying Agency	Credential Title	Date Completed
E5	American Board for Certification in Homeland Security (ABCHS)	Certified in Homeland Security Level V (CHS-V)	
E4	AXELOS	ITIL Foundation Level	
E5	Cisco Systems, Inc.	Cisco Certified Design Associate (CCDA)	
E6	Cisco Systems, Inc.	Cisco Certified Design Professional (CCDP)	
E4	Cisco Systems, Inc.	Cisco Certified Entry Networking Technician (CCENT)	
E5	Cisco Systems, Inc.	Cisco Certified Network Associate (CCNA) Routing and Switching	
E4	Cisco Systems, Inc.	Cisco Certified Network Associate (CCNA) Security	
E6	Cisco Systems, Inc.	Cisco Certified Network Professional (CCNP) Routing and Switching	
E5	Cisco Systems, Inc.	Cisco Cybersecurity Specialist	
E3	Computing Technology Industry Association (CompTIA)	CompTIA A+ ce	
E7	Computing Technology Industry Association (CompTIA)	CompTIA Advanced Security Practitioner (CASP) ce	
E4	Computing Technology Industry Association (CompTIA)	CompTIA Linux+ Powered by LPI	
E4	Computing Technology Industry Association (CompTIA)	CompTIA Network+ ce	
E4	Computing Technology Industry Association (CompTIA)	CompTIA Security+ ce	
E5	Computing Technology Industry Association (CompTIA)	CompTIA Server+	
E3	Electronics Technicians Association, International (ETA-I)	Apprentice (APP)	
E4	Electronics Technicians Association, International (ETA-I)	Fiber Optics Installer (FOI)	
E5	Electronics Technicians Association, International (ETA-I)	Fiber Optics Technician (FOT)	
E3	Electronics Technicians Association, International (ETA-I)	General Communications Technician - Level 1 (GCT1)	
E6	Global Information Assurance Certification (GIAC)	GIAC Certified Incident Handler (GCIH)	
E7	Global Information Assurance Certification (GIAC)	GIAC Certified Intrusion Analyst (GCIA)	
E7	Global Information Assurance Certification (GIAC)	GIAC Global Industrial Cyber Security Professional (GICSP)	
E7	Global Information Assurance Certification (GIAC)	GIAC Information Security Fundamentals (GISF)	
E5	Global Information Assurance Certification (GIAC)	GIAC Security Essentials Certification (GSEC)	
E7	Global Information Assurance Certification (GIAC)	GIAC Security Expert (GSE)	
E6	Global Information Assurance Certification (GIAC)	GIAC Security Leadership Certification (GSLC)	
E6	Information Systems Audit and Control Association (ISACA)	Certified Information Security Manager (CISM)	
E6	Information Systems Audit and Control Association (ISACA)	Certified Information Systems Auditor (CISA)	
E5	International Association of Privacy Professionals (IAPP)	Certified Information Privacy Technologist (CIPT)	
E5	International Information Systems Security Certification Consortium, Inc. ((ISC)2)	Associate of ISC2	
E7	International Information Systems Security Certification Consortium, Inc. ((ISC)2)	Certified Information Systems Security Professional (CISSP)	
E5	International Information Systems Security Certification Consortium, Inc. ((ISC)2)	Systems Security Certified Practitioner (SSCP)	
E4	Microsoft Corporation	Microsoft Certified IT Professional (MCITP)	
E3	Microsoft Corporation	Microsoft Certified Professional (MCP)	
E5	Microsoft Corporation	Microsoft Certified Solutions Associate (MCSA): Windows 8	
E5	Microsoft Corporation	Microsoft Certified Solutions Associate (MCSA): Windows Server 2008	
E5	Microsoft Corporation	Microsoft Certified Solutions Associate (MCSA): Windows Server 2012	
E6	Microsoft Corporation	Microsoft Certified Solutions Expert (MCSE): Server Infrastructure	
E4	Microsoft Corporation	Microsoft Certified Technology Specialist (MCTS)	
E5	Microsoft Corporation	Microsoft Certified Trainer (MCT)/Learning Consultant (MCLC)	
E5	Microsoft Corporation	Microsoft Technology Associate (MTA)	
E6	Oracle Corporation	Oracle Certified Professional, Oracle Solaris 10 System Administrator	
E4	Transportation Security Administration	Transportation Worker Identification Credential (TWIC)	

Visit Navy COOL at https://www.cool.navy.mil/usn/ for additional Credentials that you may qualify to earn; however funding may be limited to your GI Bill.

UNITED SERVICES MILITARY APPRENTICESHIP PROGRAM (USMAP):

Rank	Apprenticeship	Date Completed
E1 - E9	Computer Operator	
E1 - E9	Computer Programmer (Professional & Kindred)	
E1 - E9	Electronics Mechanic	
E1 - E9	Electronics Mechanic (Any Industry)	
E1 - E9	Electronics Tester	
E1 - E9	Internetworking Technician	
E1 - E9	Radio Station Operator (Aircraft Mfg)	

Visit USMAP https://usmap.netc.navy.mil/usmapss/static/index.htm for additional information.

STAY NAVY

REENLIST / EXTEND: Request Chit/Form: _____ Career Waypoints-Reenlistment Approval: _____

Selective Training and Reenlistment (STAR): _____ Guaranteed Assignment in Detailing (GUARD 2000): _____

School as a Reenlistment Incentive: _____ Prior Service Reenlistment Eligibility - Reserve (PRISE-R):_____

Career Management System/Interactive Detailing (CMS/ID): _____

Medical/Dental Screening: _____ Command Recommendation (evaluation): _____ Bonus: _____ Ceremony: _____

Career Waypoints-Reenlistment:

The Command Career Counselor is your local advocate to assist you with the Career Waypoints application process.

- E3-E6 Sailors with less than 14 years of service must submit a Career Waypoint application, regardless of reenlistment intentions. Sailors who do not desire to reenlist will submit an "intends to separate" application. Sailors not eligible for reenlistment will submit a "not eligible" application.
- The Career Waypoints system automatically generates most of the applications needed by Sailors. Applications must be submitted no later than 13 months prior to expiration of active obligated service (EAOS) or as extended (SEAOS). Sailors with less than 24 months of contract time remaining at their projected rotation date (PRD) will submit an application 12 months prior to their PRD. In either case, the Career Waypoints system will automatically generate applications for Sailors 15 months prior to either timeframe. Applications required outside of the established C-Way gates can be submitted as Special Circumstance applications. Examples of when these may be needed include OBLISERVE for special duty, decommissioning or homeport shift.
- The C-Way 3-2-1 Process aligns career decisions with the detailing process. Soft End of Active Obligated Service (SEAOS)/End of Active Obligated Service (EAOS) applications are created by C-Way at the 15 month from SEAOS/EAOS mark and must be submitted by the Command Career Counselor at the 13 month mark. This provides time for the Career Counselor to validate the Sailor's information and to ascertain the Sailors career intentions. The first C-Way review gate occurs from 13 to 10 months from SEAOS/EAOS with career choice options of in-rate, conversion, and Selected Reserve. The second review gate occurs from 9 to 7 months from SEAOS/EAOS with career choice options of conversion and Selected Reserve. From 6 months to 3 months to SEAOS/EAOS the Sailor can only choose Selected Reserve affiliation.
- Monthly reenlistment quotas are limited and must be reserved for our best and brightest Sailors who desire to Stay Navy.
  Sailors must choose one of the following based on their desires and qualifications:
  - Reenlist-in-Rate,
  - Reenlist-in-rate, Willing to Convert
  - Convert only
  - SELRES option
  - Intend to separate
  - Not eligible

In February 2014, C-Way delivered auto-approval capabilities to provide reenlistment decisions on SEAOS/EAOS applications more quickly for eligible ratings. This changed the monthly processing of reenlistment applications as described below.

- If you are in an, "open" rating or a "balanced" rating in an undermanned year group or an E-6, you are eligible for reenlistment, and your application is submitted with correct data it will be auto-approved and returned immediately, and you can reenlist.
- If you are in a "competitive" rating or a balanced rating but not an undermanned year group, then your application will be processed through the monthly Rack and Stack process. Applications submitted in one month are processed in Rack and Stack the following month.
- For Nuclear ratings, all applications are reviewed by enlisted community managers on an ongoing basis throughout the processing month.
- If required data is missing (evaluations, Physical Fitness Assessment (PFA) data, security clearance etc.) the application will be denied with a note to your career counselor regarding what needs to be fixed. It is critical the Command Career Counselor reviews these notes to ensure Sailor's are not disadvantaged in their opportunities for retention.

- Upon completion of the monthly process, Career Waypoints results will be available to command users via the Monthly report section of the Career Waypoints system.
- Additional guidance MILPERSMAN 1440-060, NAVADMIN 149/13, NAVADMIN 150/13, and your Career Counselor

TRANSFER:

15 Months	12 Months	9 Months	6 Months	Orders Received
Career Waypoint____	Career Waypoint____	Career Waypoint____	Accept Orders_____	Screening_____
Exception Family Member___	EFM_____	CMS/ID_____	Reverse Sponsor_____	Obligate_____
CMS/ID_____	CMS/ID_____	SRB_____	Relocation (FFSC) ____	Bonus_____
Continuous Overseas Tours (COT) _____			Medical/Dental_____	
Overseas Tour Extension Incentive Program (OTEIP) _____			SRB_____	

For additional assistance in transfer and relocation, go to the Military HOMEFRONT website: http://www.public.navy.mil/bupers-npc/Pages/default.aspx and visit your Fleet and Family Support Center on base.

SEPARATING/RETIRE:

18 -12 months	6 months	90 days	30 days
Transition GPS _____	MED/DEN _____	Copy of Records_____	Copy of Records _____
Complete DD2648PSD_____	Relocation _____	Microfiche CD_____	PSD_____
Transition Planning_____	Relocation Services (FFSC) _____	Arrange Ceremony_____	MED/DEN _____
	Reserve Affiliation_____	Request Leave / PTDY _____	
	VA/DVA_____		

PHYSICAL FITNESS:

Participate in a year-round physical fitness program to meet Navy fitness and BCA standards. Review and verify accuracy of PFA data in PRIMS within 60 days of the PFA cycle. (PRIMS is accessible through your BUPERS Online Account)

Height_____ Weight_____ If Required (Neck_____ Waist_____ Hips (Female) _____ BCA _____)

Last 2 PRT Cycles: Curl-ups_____/_____ Push-ups_____/_____ Run/Swim/Cardio_____/____ Overall Score_____/_____

List date (if) any PRT/BCA failure(s) over the last 5 years _____/_____ List if any Medical Waiver(s)_____/_____

For more information on Navy Fitness, visit: http://www.navyfitness.org/

PROFESSIONAL MILITARY EDUCATION

(Resident and non-resident coursework designed to enhance a Sailor's general military professional knowledge and abilities)

EDUCATION: (Prior to considering any pursuit of off duty education or program enrollment VISIT YOUR NAVY COLLEGE OFFICE or call the Virtual Education Center (VEC)!!!)

Education Plan Completed (Navy College Office/VEC _____Current Education Level_____

Degree Goal_____
Various distance learning degree options are available using, Sailor and Marine Online Academic Advisor (SMOLAA)

Goal: Date: AA/AS _____ BA/BS _____ Master _____
(Credits to earn a degree - AA/AS: 60 SH/90 QH, BA/BS: 120 SH/180, QH, Master /Doctorate: Variable based on program)

Number of current credits _____ American Council on Education (ACE) recommended credits_____

SOC DNS Agreement _____ Joint Service Transcripts (JST) _____ HS Transcripts_____ College Transcripts_____

Date Degree Obtained: AA/AS _____ BA/BS _____ Master _____ Doctorate _____

For entry into JST, send official transcripts to:
Naval Education and Training Professional Development and Technology Center
Attn: JST Operation Center N615
6490 Saufley Field Road
Pensacola, FL 32509
Phone: 1-877-838-1659
Comm: 757-492-4684
FAX: 757-492-5095
DSN: 492-4684
Email: VEC@navy.mil

VOLUNTARY EDUCATION (Study guides and exam preparations and practice test located on NKO)

Academic skills _____ NCPACE _____CLEP _____DSST _____TA _____MGIB _____Post 9/11 GIB_____

E4 REQUIRED NAVY PME:

Course Title	Course Location	CIN/CSE ID	Course Length	Date Completed
Petty Officer Second Class Selectee Leadership Course - Phase One	Command Delivered	CPPD-LEAD-09-002	16 hours	
Petty Officer Second Class Selectee Leadership Course - Phase Two	Command Delivered	CPPD-LEAD-09-002	10 hours	
Ethics Training	Command Delivered			
Required General Military Training Topics For FY 2016 (Standardized Core Training) [1]				
Antiterrorism Level I Awareness	NKO/Command Delivered	CENSECFOR-AT-010-1.0		
Combating Trafficking in Persons General Awareness	NKO/Command Delivered	DOD-CTIP-1.0		
Counterintelligence Awareness and Reporting	NKO/Command Delivered	DOD-CIAR-1.0		
Cyber Awareness Challenge V3	NKO/Command Delivered	DOD-IAA-V13.0		
Operations Security (Uncle Sam's OPSEC)	NKO/Command Delivered	NIOC-USOPSEC-2.0		
Privacy and Personally Identifiable Information	NKO/Command Delivered	DOD-PII-2.0		
Records Management	NKO/Command Delivered	DOR-RM-010-1.1		
Sexual Assault Prevention and Response Awareness (SAPR)	Command Delivered	CPPD-GMT-SAPRA-1.0 CC		
Equal Opportunity/Sexual Harassment/Grievance Procedures [2]	Command Delivered	CPPD-GMT-EOSH-1.0		
Suicide Prevention	Command Delivered	CPPD-GMT-SAP-1.0		
Required General Military Training Topics For FY 2016 (Command-Assigned Readiness –Enhancement topics; biennial periodicity) [3]				
Alcohol, Drug, and Tobacco Awareness	Command Delivered	CPPD-GMT-ADTA-1.0		
Domestic Violence Prevention and Reporting	NKO/Command Delivered	CPPD-GMT-DV-1.0		
Sexual Health and Responsibility	NKO/Command Delivered	CPPD-GMT-SHR-1.0		
Stress Management	Command Delivered	CPPD-GMT-SM-1.0		

1 - Verify GMT topics on NKO GMT web page.
2 - Course should be delivered in conjunction with SAPR. If not practicable, separate training is still required.
3 - Topics to be delivered once per deployment cycle. If deployment cycle is not applicable or exceeds two years between deployments, then deliver once every two years.

E4 REQUIRED COMMUNITY PME:

Course Title	Course Location	CIN/CSE ID	Course Length	Date Completed
Electronic Key Management System	NKO/PQS Page	NAVEDTRA 43462-1B	Self-paced	
Navy Radio Communications Afloat	NKO/PQS Page	NAVEDTRA 43355-2	Self-paced	
Information Assurance Technician	NKO/PQS Page	NAVEDTRA 43469	Self-paced	
Special Intelligence Afloat Communication	NKO/PQS Page	NAVEDTRA 43551-3B	Self-paced	
Information Systems and Telecommunications Clerk.	NKO/PQS Page	NAVEDTRA 43355-G		
Navy Networks	NKO/PQS Page	NAVEDTRA 43355-1		

E4 RECOMMENDED NAVY PME:

Course Title	Course Location	CIN/CSE ID	Course Length	Date Completed
Leadership Core Continuum (LCC)	Command Delivered	CPPD10-LCC (Series)	6 hours	
Military Requirements for Petty Officer Third and Second Class (EDITION 1/1/2001)		NAVEDTRA 14504		
Introductory Enlisted Professional Military Education (IEPME)	NKO	Military DON/ PME	18 hours	
Block 1 Introductory EPME - Introduction	NKO	IEPME-INTRO-B1-V2	-	
Block 2 Introductory EPME - History and Traditions	NKO	IEPME-INTRO-B2-V2	3 hours	
Block 3 Introductory EPME - Enlisted Professionalism	NKO	IEPME-INTRO-B3-V2	3 hours	
Block 4 Introductory EPME - Policy and the Navy	NKO	IEPME-INTRO-B4-V2	3 hours	
Block 5 Introductory EPME - Planning for Operations	NKO	IEPME-INTRO-B5-V2	3 hours	
Block 6 Introductory EPME - Regional and Cultural Awareness	NKO	IEPME-INTRO-B6-V2	3 hours	
Block 7 Introductory EPME - Technology in the Maritime Domain	NKO	IEPME-INTRO-B7-V2	3 hours	
Block 8 Introductory EPME - Conclusion	NKO	IEPME-INTRO-B8-V2	-	
Cultural Awareness	NKO or College Course	Foreign Language and Culture	45 hours	
English 101	College Course		45 hours	
English Reading	College Course		45 hours	
English Writing	College Course		45 hours	
Math	College Course		45 hours	
Speech	College Course		45 hours	
Navy Reserve Fundamentals for Active Duty Course	NKO	NAVRESFOR-NRF-3.0	10 hours	
Nutrition	NKO	NMHCI2107V2.1	1 hour	
Personal Financial Management	NKO	CPD-PFM-1.0	8 hours	
PREVENT	Command Delivered	S-501-0150	24 hours	
Recommended General Military Training Topics For FY 2016 (Delivery determined by command discretion) [1]				
Energy Policy	Command Delivered	OPNAV-GMTE-1.0		
Hazing Policy and Prevention	Command Delivered	CPPD-GMT-HPP-1.0		
Operational Risk Management	NKO/Command Delivered	CPPD-GMT-ORM-1.0		
Personal Financial Management	Command Delivered	CPPD-GMT-PFM16-1.0		
Physical Readiness	NKO/Command Delivered	CPPD-GMT-PRT-2.0		

1 - Verify GMT topics on NKO GMT web page.

Courses with Recommended Reserve Points:

Commander Navy Reserve Forces (CNRF) N7 determines the number of reserve points awarded for completion of a course taken on Navy E-Learning. This listing should only be used as a guide and is subject to change by direction of CNFR N7.

Navy E-Learning has no control over how many, if any, reserve points are eventually awarded for the completion of a course. All questions concerning the award of reserve points should be directed to CNFR N7.

E4 RECOMMENDED RESERVE PME:

Course Title	Course Location	CIN/CSE ID	Course Length	Date Completed
NROWS Orders Administration Course	NKO	R-500-0140/02PG /DoN	8 hours	
Naval Reserve Center Commanding Officer Officer In Charge	NKO	CNRFC-COOIC-1.0 /DoN	8 hours	
Guidance for Mobilization	NKO	CNRFC-GMB-1.1 /DoN	4 hours	
Military Sealift Command 101	NKO	CNRFC-MSC101 /DoN 1.1	24 hours	
Non-Prior Service Accession Program	NKO	CNRFC-NPSAP-2 /DoN 0	23 hours	

E4 RECOMMENDED COMMUNITY PME:

Course Title	Course Location	CIN/CSE ID	Course Length	Date Completed
Tactical Support Center (TSC) Information Systems Manager	NKO/PQS Page	NAVEDTRA 43206-2D	Self-paced	
Shipboard Wide Area Network	NKO/PQS Page	NAVEDTRA 43348	Self-paced	
LCS Exterior Communications (EXCOMM) System	NKO/PQS Page	NAVEDTRA 43101-4	Self-paced	
Electronic Technician Vol. 06 Digital Data Systems	Non Resident Training Course	NAVEDTRA 14091	Self-paced	
Electronics Technician Vol.3 Communication Systems	Non Resident Training Course	NAVEDTRA 14088	Self-paced	
Introduction to DON information & Personnel Security Program	Non Resident Training Course	NAVEDTRA 14210	Self-paced	
NEETS Module 24 Introduction to Fiber Optics	Non Resident Training Course	NAVEDTRA 14196	Self-paced	
NEETS Module 9 Introduction to Wave Generators and Wave Shaping	Non Resident Training Course	NAVEDTRA 14181	Self-paced	
NEETS Module 10: Introduction to Wave Propagation, Transmission Lines, and Antennas	Non Resident Training Course	NAVEDTRA 14182	Self-paced	
NEETS Module 12 Modulation Principles	Non Resident Training Course	NAVEDTRA 14184	Self-paced	
NEETS Module 17 Radio Frequency Communications Principles	Non Resident Training Course	NAVEDTRA 14189	Self-paced	
NEETS Module 22 Introduction to Digital computers	Non Resident Training Course	NAVEDTRA 14194	Self-paced	

NAVY PROFESSIONAL READING PROGRAM (PRP)

The purpose of the Reading Program is to facilitate the professional and personal development of all Sailors. For additional information on changes, refer to NAVADMIN 309/12 or visit http://navyreading.dodlive.mil/ or http://navy.lib.overdrive.com/ or https://wwwa.nko.navy.mil

ESSENTIAL READING

WARFIGHTING FIRST	**Completed**
1812: The Navy's War *by George C. Daughan*	
Cybersecurity and Cyberwar: What Everyone Needs to Know *by P.W. Singer*	
SEAL of Honor *by Gary Williams*	
Leading with the Heart *by Mike Krzyzewski, Donald T. Phillips, and Grant Hill*	
The Twilight War *by David Crist*	
Wake of the Wahoo *by Forest J. Sterling*	
OPERATE FORWARD	**Completed**
The Crisis of Islam *by Bernard Lewis*	
Execute Against Japan *by LT Joel Holwitt, USN*	
Monsoon *by Robert Kaplan*	
Neptune's Inferno *by James D. Hornfischer*	
Red Star Over the Pacific *by Toshi Yoshihara and James Holmes*	
Fallout *by Catherine Collins and Douglas Frantz*	
BE READY	**Completed**
A Sailor's History of the U.S. Navy *by Thomas Cutler*	
In the Shadow of Greatness *by Joshua Welle, John Ennis, Katherine Kranz and Graham Plaster*	
Navigating the Seven Seas *by Melvin G. Williams, Sr. and Melvin G. Williams, Jr.*	
The Trident: The Forging and Reforging of a Navy SEAL Leader *by Jason Redman and John Bruning*	
Turn the Ship Around *by David Marquet*	
Wired for War *by P.W. Singer*	

Twenty-four additional books are categorized as "recommended reading," and are available as electronic books (e-books). Many can be downloaded at no cost through the Navy general library program site on Navy Knowledge On-line (NKO).

The entire list, with book summaries and additional information is available at http://navyreading.dodlive.mil/

The CNO-PRP has been streamlined to make our Navy's reading program more interactive, affordable, and wherever possible, electronically accessible. To that end: a number of the titles will be available for free at the NKO portal at https://wwwa.nko.navy.mil.

- Click on the reference tab, then e-library audio and e-books tab.
- In order to download books, an "overdrive" account is required. On the top right, click on the overdrive window and follow the prompts.
- Then, not only are the PRP books available, but also hundreds of other items.

Note: Security restrictions preclude downloading via Navy owned computers, so downloading them to personally-owned devices will be required.

E4 RECOMMENDED COMMUNITY READING

Title	Completed
Naval Telecommunications Procedures, NTP 3(K), Telecommunications Users Manual Operating Procedures; NKO/CID/IT Page	
Fleet Communications; NKO/CID/IT Page *NTP 4 (E)*	
Electronic Key Management System (EKMS)	
Automatic Digital Network (AUTODIN) Operating Procedures *NKO/CID/IT Page*	
Naval Telecommunications Procedures, NTP 21, Defense Message System User's Manual; NKO/CID/IT Page	
Naval Telecommunications Procedures, NTP 22 Defense Message System Local Operations And Network Management Policies and Procedures; NKO/CID/IT Page	
Naval Tactics Techniques Procedure 6-02, C4I Infrastructure; NKO/CID/IT Page	
Naval Warfare Publication 5-01 Naval Operational Planning; NKO/CID/IT Page	
Department of the Navy Security Classification Guides *OPNAVINST 5513.1*	
Department of the Navy Information Security Program *SECNAV M-5510.36*	
ACP 123(A), Common Messaging Strategy & Procedure; NKO/CID/IT page *by Allied Communication Publication*	
ACP 124(D), Communication Instruction Radio Telegraph Procedure; NKO/CID/IT Page *by Allied Communication Publication*	
Communication Instructions Radiotelephone Procedures; NKO/CID/IT Page *ACP 125(F)*	
ACP 126(C), Communication Instruction Teletypewriter Procedure; NKO/CID/IT page *by Allied Communication Publication*	
ACP 128(A), Allied Telecommunication Record System Operating Procedure; NKO/CID/IT page *by Allied Communication Publication*	
ACP 135, Communication Instructions Distress and Rescue Procedures; NKO/CID/IT page *by Allied Communication Publication*	
Federal Information Processing Standard FIPS 83, Guidelines on users Authentication Techniques for Computer Network Access Control *NKO/CID/IT Page*	
Joint Army-Navy-Air Force Publication, JANAP 128(J), Automatic Digital Network (AUTODIN) Operating Procedures; NKO/CID/IT Page	
ACP 121(H), Communication Instructions - General; NKO/CID/IT page *by Allied Communication Publication*	
NEETS, Module 9--Introduction to Wave Generators and Wave Shaping; NKO/CID/IT Page *NAVEDTRA 14181*	
NEETS, Module 10--Introduction to Wave Propagation, Transmission Lines, and Antennas; NKO/CID/IT Page *NAVEDTRA 14182*	
NEETS, Module 12--Modulation Principles; NKO/CID/IT Page *NAVEDTRA 14184*	
NEETS, Module 17--Radio Frequency Communications Principles; NKO/CID/IT Page *NAVEDTRA 14189*	
NEETS, Module 22--Introduction to Digital computers; NKO/CID/IT Page *NAVEDTRA 14194*	
NEETS, Module 24--Introduction to Fiber; NKO/CID/IT Page *NAVEDTRA 14196*	

Information Systems Technician
Petty Officer Second Class
(Journeyman)

NAME_____

SKILL TRAINING

(Schools, courses and assignments directly related to occupation)

REQUIRED SKILL TRAINING

Course Title	Course Location	CIN/CSE ID	Course Length	Date Completed
See initial skills training from E1-E4 section				

RECOMMENDED SKILL TRAINING

Course Title	Course Location	CIN/CSE/ACE ID	Course Length	Date Completed
Windows Server 2008	MICROSOFT	70-640/70-642/70-646	Self-paced	
Sensitive Security Information, Certified (SSI)	American Board for Certification in Homeland Security	SSI01A/ SSI02A/ SSI03A/ SSI04A	Self-paced	
Certified Homeland Security Level III	American Board for Certification in Homeland Security	HS1030B	Self-paced	
Certified Homeland Security Level IV	American Board for Certification in Homeland Security	HS1040B	Self-paced	
Integrated Shipboard Network System (ISNS) for 3.0/3.5/4.0 Family of Systems.	Norfolk VA, San Diego CA,	W-150-0101 / W-150-0800 / W-150-0900	33 days	
Automated Digital Network System (ADNS) Family of Systems variants F and/or H	Various	A-101-1122 / A-101-1125	12 days	
End to End (Prerequisite is ADNS/ISNS/ISSM)	Norfolk VA Pearl Harbor HI San Diego CA Yokosuka, Japan Mayport, FL Everett, WA	A-150-1116	5 days	
Digital Wideband Transmission System (DWTS) Operator	Norfolk, VA / San Diego, CA	A-260-0360	4 days	
Digital Modular Radio(DMR)	Norfolk, VA / San Diego CA	A-260-1955	4 days	
High Frequency Radio Group (HFRG)	San Diego, CA	A-260-0051	10 days	
Theatre Battle Management Core System (TBMCS)	Dam Neck, VA San Diego CA,	A-531-0028	26 days	
Secret Compartmental Information (SCI) Network System Administrator	San Diego CA	W-3B-1112	5 days	
Secret Compartmental Information (SCI) Network Operator	Norfolk, VA/ San Diego CA,	W-3B-1111	12 days	

NAVY ENLISTED CLASSIFICATION CODE (NEC) OPPORTUNITIES

Course Title	Course Location	CIN/CSE/ACE ID	Course Length	Date Completed
2710, 2765, 2766 - Global Command Control System Maritime (GCCS-M) System Administrator for 4.X/ 4.0.3/ 4.1 Family of Systems	Dam Neck, VA / San Diego, CA	A-150-0045 / A-150-3400 / A-150-3500	26 days	
2730 - Navy Tactical Command Support System (NTCSS) II Manager	VirginiaBeach,VA Groton, CT/SanDeigo, CA	A-531-0021	3 weeks 15 Instructional Days	
2735 - Journeyman-Networking Core	Dam Neck, VA San Diego, CA Groton, CT Pensacola, FL	A-150-1980	110 days	
2375 - Tactical Support Center (TSCOMM) Operator Course	Jacksonville, FL	J-201-0816	22 days	
2780 - Network Security Vulnerability Technician (NSVT)	Dam Neck, VAGroton, CTSan Diego, CAKings Bay, GAYokosuka, JapanBangor, WAPearl Harbor, HI	A-531-0022	8 weeks 40 Instructional Days	
2778 - Mission Distribution System Operator	Dam Neck, VA	J-243-2952	19 days	
2379 - Journeyman Communication Course	Pensacola, FL San Diego, CA Norfolk, VA	A-260-0061	96 days	
9613 - Special Operation Radio Operator	Fort Bragg, NC	S-101-0001	159 days	
9502 - Navy Instructor Training Course (NITC)	Various Locations	A-012-0077	19 days	
Commercial Broadband Satellite Program (CBSP) Unit Level/ Force Level or Small Ship variant operator.	Norfolk, VA / San Diego, CA	A-260-0163 / A-260-0165	12 days	
2781 - Advanced Network Analyst	Various	A-531-0045	11 weeks 54 Instructional Days	

JOB DESCRIPTION

The IT Technician is comprised of personnel who perform core and specialty functions of Network Administration, Communications Operations and Message Processing.

In the area of **Network Administration**, IT Technicians provide technical assistance to computer system users. They answer questions and/or resolve computer problems for clients. IT Technicians provide assistance concerning the use of computer hardware and software, including printing, installation, word-processing, electronic mail, and operating systems. They conduct help desk functions and repair fiber optics and a variety of cables. Additionally, IT Technicians conduct day-to-day operations such as system backups and restores, and add, modify, or delete user accounts. They install operating systems, applications and peripherals, troubleshoot user problems, debug command language scripts, and assist the Information Systems Security Officer (ISSO) in access control security (i.e., passwords, access and control lists, etc).

They may also perform advanced Network operations, administration, maintenance and training. IT Technicians analyze, design, test, and evaluate network systems, Internet, Intranet, and other data communications systems. They perform network modeling, analysis, and planning. They research and recommend network and data communications hardware and software solutions. IT Technicians may also perform Network Enterprise Architecture | Cyber Security. They defend Navy networks from cyber threats utilizing hardware/software defense in depth methodology to prevent cyber-attacks.

In the area of **Communications Operations**, IT Technicians establish, monitor, and maintain radio frequency (RF) communications systems both ashore and afloat. Specifically, they plan, coordinate establishment, monitor, troubleshoot, and restore classified and unclassified RF communication systems that support exchange of voice, data, video and imagery using terrestrial or satellite VLF, LF, MF, HF, VHF, UHF, SHF and EHF frequency spectrums afloat and ashore. Additionally, specialists in this area may perform spectrum management - coordinate and generate frequency assignments for use within an area of responsibility, assess the impact of new frequency requirements upon the existing radio frequency environment, maintain a history of interference incidents and frequency employment files, initiate action as appropriate to prevent and/or correct harmful interference, and resolve joint and space interference.

In the area of **Message Processing**, IT Technicians provide message handling, storage, and retrieval of incoming and outgoing messages afloat and ashore. They maintain connectivity between shipboard LAN and message delivery systems ashore. They administer user profiles, and maintain directory information trees. IT Technicians operate the Message Systems, NAVMACS, and other automated message processing systems.

RECOMMENDED BILLET ASSIGNMENTS

The Information System Technician of the 21st century operate and maintain the Navy's global satellite telecommunications systems, mainframe computers, local and wide area networks, and micro-computer systems used in the fleet. Administrative support is also provided with the operation of automated equipment that keeps records of personnel training, disbursement, health, assignments and promotions within the Navy. They ensure the all-important communications link between units at sea and stations ashore. Help desk technician, Media clerk and network operator for shore and afloat commands.

PRIORITY ASSIGNMENT: Overseas Shore (Communication Center, Staff Duty, Joint Communications, Special Warfare), Navy Expeditionary Warfare

BILLET ASSIGNMENT ASHORE: Work Center Supervisor in a Communication Center, Automated Information System Operator, Fleet Network Operation Center Supervisor

SUBSEQUENT ASSIGNMENT: In CONUS Shore Tour (NCTAMS, NCTS, NMCI,Tactical Support Center , NIOC,Afloat Training group, Special Warfare, Center for Information Dominance)

BILLET ASSIGNMENT ASHORE: Work Center Supervisor in a Communication Center, Automated Information System Operator, Fleet Network Operation Center, Instructor duty

ALTERNATE ASSIGNMENT: Sea (any platform), Afloat Staff, Special Warfare, Navy Expeditionary Warfare

BILLET ASSIGNMENT SEA: Work Center Supervisor in a Communication Center Operator, or Automated Information System, SPECWAR Communication Support

PERSONAL AND PROFESSIONAL DEVELOPMENT (Completed at reporting 30 day Career Development Board)

Command Address: _____ QD Phone Number: _____

_____

Division Officer: _____ Phone Number: _____

Leading Chief Petty Officer: _____ Phone Number: _____

Leading Petty Officer: _____ Phone Number: _____

Sponsor/Mentor: _____ Phone Number: _____

Depart/Division Career Counselor: _____ Phone Number: _____

ADSD: _____ REPORT DATE: _____ EAOS: _____ PRD: _____ SEA / SHORE: _____/____
PAYGRADE E5 (3 Years time in service required to be eligible for advancement to E-6)

Date Advanced: _____ Eligible Advancement Date: _____ Number of times up: _____ HYT Date: _____

Security Clearance Level: _____ Date Last updated: _____ Command INDOC complete: _____

CAREER DEVELOPMENT BOARDS: Use OPNAVINST 1040.11(ser) & Career Counselor Handbook NAVPERS 15878
(E5) Reason for Convening/Discussion Items: (Upon completion update (CIMS) Career Information Management System)

Reporting (within 30 days for active duty or three drill weekends for SELRES) (Date Conducted): _____

6 Month: _____ 12 Month: _____ 24 Month: _____36 Month: _____48 Month: _____

60 Month: _____ Special Program: _____ Member Request: _____

HYT 24 months (Date): _____ HYT 12 months (Date): _____ HYT Waiver Date: _____Approve/Disapprove

Career Waypoint 15 months to EAOS: _____ Career Waypoint not approved: _____ CMS/ID 13 months to PRD: _____

Rating Conversion: _____ Navy Formal Training Schools Request ("A"/"C"etc): _____

Transfer: _____ Early Separation: _____ Career Status Bonus (election message received):_____

Physical Fitness Test Failure: _____

Advancement Center: Visit NKO Navy Advancement page located under the Career Management Tab
(Items to collect/discuss: Bibliography for Advancement, Enlisted Advancement Exam Strategy Guide, Profile Sheets)

Pass Not Advanced (PNA) 3 times: _____ Standard Score 40 or less/failed: _____

Enlisted to Officer Commissioning Program Application & Administration Manual OPNAVINST 1420.1(series):

Commissioning Programs Applications: _____ (prior to submission, command endorsement):_____

Naval Academy _____ Naval Academy Preparatory School (NAPS) _____

Officer Candidate School _____ Seaman to Admiral 21 (STA-21) _____

Medical Enlisted Commissioning Program (MECP) _____ Medical Service Corps In-service Procurement _____

Navy Leader Planning Guide: Log on to NKO and select the Leadership Tab to access this guide.

RECORD REVIEW CHECKLIST

Review your Official Record to see what documentation, qualifications, etc. may be missing or requiring an update. This is a great opportunity to meet with your Mentor, Leading Petty Officer or Leading Chief Petty Officer to understand the importance of keeping your record up-to-date. Check the following three major sections to verify your Official Record:

a. **BUPERS Online**: BUPERS Online (https://www.bol.navy.mil) is your main tool to ensure your record is up to date and helps you to be proactive in making the most of your promotion opportunity. You should review your:

   1. **Official Military Personnel File (OMPF)**: All active duty and reserve personnel having a BOL account, a CAC (with appropriate certificates) and a CAC-enabled computer can now view their OMPF online by selecting the OMPF option on the BOL main menu page. This is the preferred method of obtaining OMPF information to eliminate the unnecessary time-lags caused by waiting days or weeks to receive a requested CD ROM.

   2. **If Deployed:** Click on "*Request Record on CD*" to order your Official Military Personnel File (OMPF). This must be accomplished four to six months before a board convenes, which will allow time for delivery and updating of your record if required.

   3. Check your **Performance Summary Record (PSR)** and **Enlisted Summary Record (ESR)** on https://www.bol.navy.mil, click on the "*ODC, OSR, PSR, ESR*" link.

b. **Electronic Service Record (ESR)** Self-Service ESR: This can be viewed at (https://nsips.nmci.navy.mil) or on the Navy Standard Integrated Personnel System (NSIPS) ESR server onboard ship.

c. **Electronic Training Jacket (ETJ)**: Log-on to Navy Knowledge Online (NKO) and review your entire ETJ making sure that each section is correct. If not, clicking on "*Data Problems*" at the bottom of each page which will guide you on how to make corrections or updates.

d. **US Navy Awards website**: Log onto (https://awards.navy.mil/) to review any awards you may qualify for but were unaware of.

QUALIFICATIONS AND CERTIFICATIONS

Sea/Shore General Qualifications **Watch Standing Qualifications**	**Report Date**	**Completion Date** **(If qualification is not required place N/A in this Block)**
Ship Board Fire Fighting		
Aviation Fire Fighting		
Basic Damage Control		
Advanced Damage Control		
3M 301 Maintenance Person		
3M 302 Repair Parts/Supply Petty Officer		
3M 303 Work Center Supervisor		
3M 304 LCPO/Division Officer		
Messenger of the Watch (MOOW)		
Petty Officer of the Watch (POOW)		
Junior Officer of the Deck (JOOD)		
Personal Qualifications Standard		

Mandatory warfare qualification for enlisted Sailors assigned to designated warfare qualifying commands:

Warfare qualification programs	**Report Date**	**Completion Date** **(If qualification is not required place N/A in this Block)**
Aviation Warfare Specialist		
Expeditionary Warfare Specialist		
Fleet Marine Forces		
Information Dominance Warfare Specialist		
Parachute Jumper		
SEABEE Combat Warfare		
Surface Warfare Specialist		

Rate Specific/Department Qualifications (Add)	**Report Date**	**Completion Date** **(If qualification is not required place N/A in this Block)**

CERTIFICATIONS

The following post military occupations are similar to the IT-Information Systems Technician Rating. For more information about these occupations, visit NAVY COOL at https://www.cool.navy.mil/usn/.

Occupation (Civilian Employer)
Broadcast Technicians
Computer and Information Systems Managers
Computer Network Architects
Computer Network Support Specialists
Computer Operators
Computer Programmers
Computer Systems Analysts
Computer User Support Specialists
Computer, Automated Teller, and Office Machine Repairers
Database Administrators
Electronics Engineering Technicians
Information Security Analysts
Information Technology Project Managers
Inspectors, Testers, Sorters, Samplers, and Weighers
Network and Computer Systems Administrators
Radio Operators
Radio, Cellular, and Tower Equipment Installers and Repairers
Telecommunications Engineering Specialists
Telecommunications Equipment Installers and Repairers, Except Line Installers

Occupation (Federal Employer)
0132 - Intelligence Series
0335 - Computer Clerk and Assistant Series
0394 - Communications Clerical Series
2210 - Information Technology Management Series
2608 - Electronic Digital Computer Mechanic
9944 - Electronics Technician

Navy COOL: The following certifications and licenses are applicable to the IT-Information Systems Technician rating. *They may require additional education, training or experience.*

Target paygrade	Certifying Agency	Credential Title	Date Completed
E5	American Board for Certification in Homeland Security (ABCHS)	Certified in Homeland Security Level V (CHS-V)	
E4	AXELOS	ITIL Foundation Level	
E5	Cisco Systems, Inc.	Cisco Certified Design Associate (CCDA)	
E6	Cisco Systems, Inc.	Cisco Certified Design Professional (CCDP)	
E4	Cisco Systems, Inc.	Cisco Certified Entry Networking Technician (CCENT)	
E5	Cisco Systems, Inc.	Cisco Certified Network Associate (CCNA) Routing and Switching	
E4	Cisco Systems, Inc.	Cisco Certified Network Associate (CCNA) Security	
E6	Cisco Systems, Inc.	Cisco Certified Network Professional (CCNP) Routing and Switching	
E5	Cisco Systems, Inc.	Cisco Cybersecurity Specialist	
E3	Computing Technology Industry Association (CompTIA)	CompTIA A+ ce	
E7	Computing Technology Industry Association (CompTIA)	CompTIA Advanced Security Practitioner (CASP) ce	
E4	Computing Technology Industry Association (CompTIA)	CompTIA Linux+ Powered by LPI	
E4	Computing Technology Industry Association (CompTIA)	CompTIA Network+ ce	
E4	Computing Technology Industry Association (CompTIA)	CompTIA Security+ ce	
E5	Computing Technology Industry Association (CompTIA)	CompTIA Server+	
E3	Electronics Technicians Association, International (ETA-I)	Apprentice (APP)	
E4	Electronics Technicians Association, International (ETA-I)	Fiber Optics Installer (FOI)	
E5	Electronics Technicians Association, International (ETA-I)	Fiber Optics Technician (FOT)	
E3	Electronics Technicians Association, International (ETA-I)	General Communications Technician - Level 1 (GCT1)	
E6	Global Information Assurance Certification (GIAC)	GIAC Certified Incident Handler (GCIH)	
E7	Global Information Assurance Certification (GIAC)	GIAC Certified Intrusion Analyst (GCIA)	
E7	Global Information Assurance Certification (GIAC)	GIAC Global Industrial Cyber Security Professional (GICSP)	
E7	Global Information Assurance Certification (GIAC)	GIAC Information Security Fundamentals (GISF)	
E5	Global Information Assurance Certification (GIAC)	GIAC Security Essentials Certification (GSEC)	
E7	Global Information Assurance Certification (GIAC)	GIAC Security Expert (GSE)	
E6	Global Information Assurance Certification (GIAC)	GIAC Security Leadership Certification (GSLC)	
E6	Information Systems Audit and Control Association (ISACA)	Certified Information Security Manager (CISM)	
E6	Information Systems Audit and Control Association (ISACA)	Certified Information Systems Auditor (CISA)	
E5	International Association of Privacy Professionals (IAPP)	Certified Information Privacy Technologist (CIPT)	
E5	International Information Systems Security Certification Consortium, Inc. ((ISC)2)	Associate of ISC2	
E7	International Information Systems Security Certification Consortium, Inc. ((ISC)2)	Certified Information Systems Security Professional (CISSP)	
E5	International Information Systems Security Certification Consortium, Inc. ((ISC)2)	Systems Security Certified Practitioner (SSCP)	
E4	Microsoft Corporation	Microsoft Certified IT Professional (MCITP)	
E3	Microsoft Corporation	Microsoft Certified Professional (MCP)	
E5	Microsoft Corporation	Microsoft Certified Solutions Associate (MCSA): Windows 8	
E5	Microsoft Corporation	Microsoft Certified Solutions Associate (MCSA): Windows Server 2008	
E5	Microsoft Corporation	Microsoft Certified Solutions Associate (MCSA): Windows Server 2012	
E6	Microsoft Corporation	Microsoft Certified Solutions Expert (MCSE): Server Infrastructure	
E4	Microsoft Corporation	Microsoft Certified Technology Specialist (MCTS)	
E5	Microsoft Corporation	Microsoft Certified Trainer (MCT)/Learning Consultant (MCLC)	
E5	Microsoft Corporation	Microsoft Technology Associate (MTA)	
E6	Oracle Corporation	Oracle Certified Professional, Oracle Solaris 10 System Administrator	
E4	Transportation Security Administration	Transportation Worker Identification Credential (TWIC)	

Visit Navy COOL at https://www.cool.navy.mil/usn/ for additional Credentials that you may qualify to earn; however funding may be limited to your GI Bill.

UNITED SERVICES MILITARY APPRENTICESHIP PROGRAM (USMAP):

Rank	Apprenticeship	Date Completed
E1 - E9	Computer Operator	
E1 - E9	Computer Programmer (Professional & Kindred)	
E1 - E9	Electronics Mechanic	
E1 - E9	Electronics Mechanic (Any Industry)	
E1 - E9	Electronics Tester	
E1 - E9	Internetworking Technician	
E1 - E9	Radio Station Operator (Aircraft Mfg)	

Visit USMAP https://usmap.netc.navy.mil/usmapss/static/index.htm for additional information.

STAY NAVY

REENLIST / EXTEND: Request Chit/Form: _____ Career Waypoints-Reenlistment Approval: _____

Selective Training and Reenlistment (STAR): _____ Guaranteed Assignment in Detailing (GUARD 2000): _____

School as a Reenlistment Incentive: _____ Prior Service Reenlistment Eligibility - Reserve (PRISE-R):_____

Career Management System/Interactive Detailing (CMS/ID): _____

Medical/Dental Screening: _____ Command Recommendation (evaluation): _____ Bonus: _____ Ceremony: _____

Career Waypoints-Reenlistment:

The Command Career Counselor is your local advocate to assist you with the Career Waypoints application process.

- E3-E6 Sailors with less than 14 years of service must submit a Career Waypoint application, regardless of reenlistment intentions. Sailors who do not desire to reenlist will submit an "intends to separate" application. Sailors not eligible for reenlistment will submit a "not eligible" application.
- The Career Waypoints system automatically generates most of the applications needed by Sailors. Applications must be submitted no later than 13 months prior to expiration of active obligated service (EAOS) or as extended (SEAOS). Sailors with less than 24 months of contract time remaining at their projected rotation date (PRD) will submit an application 12 months prior to their PRD. In either case, the Career Waypoints system will automatically generate applications for Sailors 15 months prior to either timeframe. Applications required outside of the established C-Way gates can be submitted as Special Circumstance applications. Examples of when these may be needed include OBLISERVE for special duty, decommissioning or homeport shift.
- The C-Way 3-2-1 Process aligns career decisions with the detailing process. Soft End of Active Obligated Service (SEAOS)/End of Active Obligated Service (EAOS) applications are created by C-Way at the 15 month from SEAOS/EAOS mark and must be submitted by the Command Career Counselor at the 13 month mark. This provides time for the Career Counselor to validate the Sailor's information and to ascertain the Sailors career intentions. The first C-Way review gate occurs from 13 to 10 months from SEAOS/EAOS with career choice options of in-rate, conversion, and Selected Reserve. The second review gate occurs from 9 to 7 months from SEAOS/EAOS with career choice options of conversion and Selected Reserve. From 6 months to 3 months to SEAOS/EAOS the Sailor can only choose Selected Reserve affiliation.
- Monthly reenlistment quotas are limited and must be reserved for our best and brightest Sailors who desire to Stay Navy.
  Sailors must choose one of the following based on their desires and qualifications:
  - Reenlist-in-Rate,
  - Reenlist-in-rate, Willing to Convert
  - Convert only
  - SELRES option
  - Intend to separate
  - Not eligible

In February 2014, C-Way delivered auto-approval capabilities to provide reenlistment decisions on SEAOS/EAOS applications more quickly for eligible ratings. This changed the monthly processing of reenlistment applications as described below.

- If you are in an, "open" rating or a "balanced" rating in an undermanned year group or an E-6, you are eligible for reenlistment, and your application is submitted with correct data it will be auto-approved and returned immediately, and you can reenlist.
- If you are in a "competitive" rating or a balanced rating but not an undermanned year group, then your application will be processed through the monthly Rack and Stack process. Applications submitted in one month are processed in Rack and Stack the following month.
- For Nuclear ratings, all applications are reviewed by enlisted community managers on an ongoing basis throughout the processing month.
- If required data is missing (evaluations, Physical Fitness Assessment (PFA) data, security clearance etc.) the application will be denied with a note to your career counselor regarding what needs to be fixed. It is critical the Command Career Counselor reviews these notes to ensure Sailor's are not disadvantaged in their opportunities for retention.

- Upon completion of the monthly process, Career Waypoints results will be available to command users via the Monthly report section of the Career Waypoints system.
- Additional guidance MILPERSMAN 1440-060, NAVADMIN 149/13, NAVADMIN 150/13, and your Career Counselor

TRANSFER:

15 Months	12 Months	9 Months	6 Months	Orders Received
Career Waypoint____	Career Waypoint____	Career Waypoint____	Accept Orders_____	Screening_____
Exception Family Member___	EFM_____	CMS/ID_____	Reverse Sponsor_____	Obligate_____
CMS/ID_____	CMS/ID_____	SRB_____	Relocation (FFSC) ____	Bonus_____
Continuous Overseas Tours (COT) _____			Medical/Dental_____	
Overseas Tour Extension Incentive Program (OTEIP) _____			SRB_____	

For additional assistance in transfer and relocation, go to the Military HOMEFRONT website: http://www.public.navy.mil/bupers-npc/Pages/default.aspx and visit your Fleet and Family Support Center on base.

SEPARATING/RETIRE:

18 -12 months	6 months	90 days	30 days
Transition GPS _____	MED/DEN _____	Copy of Records_____	Copy of Records _____
Complete DD2648PSD_____	Relocation _____	Microfiche CD_____	PSD_____
Transition Planning_____	Relocation Services (FFSC) _____	Arrange Ceremony_____	MED/DEN _____
	Reserve Affiliation_____	Request Leave / PTDY _____	
	VA/DVA_____		

PHYSICAL FITNESS:

Participate in a year-round physical fitness program to meet Navy fitness and BCA standards. Review and verify accuracy of PFA data in PRIMS within 60 days of the PFA cycle. (PRIMS is accessible through your BUPERS Online Account)

Height_____ Weight_____ If Required (Neck_____ Waist_____ Hips (Female) _____ BCA _____)

Last 2 PRT Cycles: Curl-ups_____/_____ Push-ups_____/_____ Run/Swim/Cardio_____/____ Overall Score_____/_____

List date (if) any PRT/BCA failure(s) over the last 5 years _____/_____ List if any Medical Waiver(s)_____/_____

For more information on Navy Fitness, visit: http://www.navyfitness.org/

PROFESSIONAL MILITARY EDUCATION

(Resident and non-resident coursework designed to enhance a Sailor's general military professional knowledge and abilities)

EDUCATION: (Prior to considering any pursuit of off duty education or program enrollment VISIT YOUR NAVY COLLEGE OFFICE or call the Virtual Education Center (VEC)!!!)

Education Plan Completed (Navy College Office/VEC _____Current Education Level_____

Degree Goal_____
Various distance learning degree options are available using, Sailor and Marine Online Academic Advisor (SMOLAA)

Goal: Date: AA/AS _____ BA/BS _____ Master _____
(Credits to earn a degree - AA/AS: 60 SH/90 QH, BA/BS: 120 SH/180, QH, Master /Doctorate: Variable based on program)

Number of current credits _____ American Council on Education (ACE) recommended credits_____

SOC DNS Agreement _____ Joint Service Transcripts (JST) _____ HS Transcripts_____ College Transcripts_____

Date Degree Obtained: AA/AS _____ BA/BS _____ Master _____ Doctorate _____

For entry into JST, send official transcripts to:
Naval Education and Training Professional Development and Technology Center
Attn: JST Operation Center N615
6490 Saufley Field Road
Pensacola, FL 32509
Phone: 1-877-838-1659
Comm: 757-492-4684
FAX: 757-492-5095
DSN: 492-4684
Email: VEC@navy.mil

VOLUNTARY EDUCATION (Study guides and exam preparations and practice test located on NKO)

Academic skills _____ NCPACE _____CLEP _____DSST _____TA _____MGIB _____Post 9/11 GIB_____

E5 REQUIRED NAVY PME:

Course Title	Course Location	CIN/CSE ID	Course Length	Date Completed
Petty Officer First Class Selectee Leadership Course - Phase One	Command Delivered	CPPD-LEAD09-003	16 hours	
Petty Officer First Class Selectee Leadership Course - Phase Two (Frocked E-6)	Command Delivered	CPPD-LEAD09-003		
ADAMS for Supervisors	Various Locations	S-501-0120	8 hours	
Ethics Training	Command Delivered			
Required General Military Training Topics For FY 2016 (Standardized Core Training) [1]				
Antiterrorism Level I Awareness	NKO/Command Delivered	CENSECFOR-AT-010-1.0		
Combating Trafficking in Persons General Awareness	NKO/Command Delivered	DOD-CTIP-1.0		
Counterintelligence Awareness and Reporting	NKO/Command Delivered	DOD-CIAR-1.0		
Cyber Awareness Challenge V3	NKO/Command Delivered	DOD-IAA-V13.0		
Operations Security (Uncle Sam's OPSEC)	NKO/Command Delivered	NIOC-USOPSEC-2.0		
Privacy and Personally Identifiable Information	NKO/Command Delivered	DOD-PII-2.0		
Records Management	NKO/Command Delivered	DOR-RM-010-1.1		
Sexual Assault Prevention and Response Awareness (SAPR)	Command Delivered	CPPD-GMT-SAPRA-1.0 CC		
Equal Opportunity/Sexual Harassment/Grievance Procedures [2]	Command Delivered	CPPD-GMT-EOSH-1.0		
Suicide Prevention	Command Delivered	CPPD-GMT-SAP-1.0		
Required General Military Training Topics For FY 2016 (Command-Assigned Readiness –Enhancement topics; biennial periodicity) [3]				
Alcohol, Drug, and Tobacco Awareness	Command Delivered	CPPD-GMT-ADTA-1.0		
Domestic Violence Prevention and Reporting	NKO/Command Delivered	CPPD-GMT-DV-1.0		
Sexual Health and Responsibility	NKO/Command Delivered	CPPD-GMT-SHR-1.0		
Stress Management	Command Delivered	CPPD-GMT-SM-1.0		

1 - Verify GMT topics on NKO GMT web page.
2 - Course should be delivered in conjunction with SAPR. If not practicable, separate training is still required.
3 - Topics to be delivered once per deployment cycle. If deployment cycle is not applicable or exceeds two years between deployments, then deliver once every two years.

E5 REQUIRED COMMUNITY PME:

Course Title	Course Location	CIN/CSE ID	Course Length	Date Completed
Electronic Key Management System	NKO/PQS Page	NAVEDTRA 43462-1B	Self-paced	
Navy Radio Communications Afloat	NKO/PQS Page	NAVEDTRA 43355-2	Self-paced	
Special Intelligence Afloat Communication	NKO/PQS Page	NAVEDTRA 43551-3B	Self-paced	
Information Assurance Technician	NKO/PQS Page	NAVEDTRA 43469	Self-paced	
Information Systems and Telecommunications Clerk.	NKO/PQS Page	NAVEDTRA 43355-G		
Navy Networks	NKO/PQS Page	NAVEDTRA 43355-1		

E5 RECOMMENDED NAVY PME:

Course Title	Course Location	CIN/CSE ID	Course Length	Date Completed
Leadership Core Continuum (LCC)	Command Delivered	CPPD10-LCC (Series)	6 hours	
Military Requirements for Petty Officer First Class (EDITION 1/1/1991)		NAVEDTRA 14145		
Basic Enlisted Professional Military Education (BEPME)	NKO	Military DON/ PME	20 hours	
Block 1 Basic EPME - Introduction	NKO	EPME-BASIC-B1		
Block 2 Basic EPME - Navy History and Heritage	NKO	EPME-BASIC-B2		
Block 3 Basic EPME - The Navy Professional	NKO	EPME-BASIC-B3		
Block 4 Basic EPME - Organization and Guidance	NKO	EPME-BASIC-B4		
Block 5 Basic EPME - Planning	NKO	EPME-BASIC-B5		
Block 6 Basic EPME - Regional Expertise and Cultural Awareness	NKO	EPME-BASIC-B6		
Block 7 Basic EPME - Technology for the Warfighter	NKO	EPME-BASIC-B7		
Block 8 Basic EPME - Conclusion	NKO	EPME-BASIC-B8		
Navy Reserve Fundamentals for Active Duty Course	NKO	NAVRESFOR-NRF-3.0	10 hours	
Nutrition	NKO	NMHCI2107V2.1	1 hour	
Culture	NKO or College Course	Foreign Language and Culture	45 hours	
Communication	College Course		45 hours	
English 101	College Course		45 hours	
English Reading	College Course		45 hours	
English Writing	College Course		45 hours	
Geography	College Course		45 hours	
History	College Course		45 hours	
Humanities	College Course		45 hours	
Language and Literature Study Guides	College Course		45 hours	
Math	College Course		45 hours	
Physical Sciences	College Course		45 hours	
Social Sciences	College Course		45 hours	
Recommended General Military Training Topics For FY 2016 (Delivery determined by command discretion) [1]				
Energy Policy	Command Delivered	OPNAV-GMTE-1.0		
Hazing Policy and Prevention	Command Delivered	CPPD-GMT-HPP-1.0		
Operational Risk Management	NKO/Command Delivered	CPPD-GMT-ORM-1.0		
Personal Financial Management	Command Delivered	CPPD-GMT-PFM16-1.0		
Physical Readiness	NKO/Command Delivered	CPPD-GMT-PRT-2.0		

1 - Verify GMT topics on NKO GMT web page.

Courses with Recommended Reserve Points:

Commander Navy Reserve Forces (CNRF) N7 determines the number of reserve points awarded for completion of a course taken on Navy E-Learning. This listing should only be used as a guide and is subject to change by direction of CNFR N7.

Navy E-Learning has no control over how many, if any, reserve points are eventually awarded for the completion of a course. All questions concerning the award of reserve points should be directed to CNFR N7.

E5 RECOMMENDED RESERVE PME:

Course Title	Course Location	CIN/CSE ID	Course Length	Date Completed
NROWS Orders Administration Course	NKO	R-500-0140/02PG /DoN	8 hours	
Naval Reserve Center Commanding Officer Officer In Charge	NKO	CNRFC-COOIC-1.0 /DoN	8 hours	
Guidance for Mobilization	NKO	CNRFC-GMB-1.1 /DoN	4 hours	
Military Sealift Command 101	NKO	CNRFC-MSC101 /DoN 1.1	24 hours	
Non-Prior Service Accession Program	NKO	CNRFC-NPSAP-2 /DoN 0	23 hours	

E5 RECOMMENDED COMMUNITY PME:

Course Title	Course Location	CIN/CSE ID	Course Length	Date Completed
Electronic Technician Vol. 06 Digital Data Systems	Non Resident Training Course	NAVEDTRA 14091	Self-paced	
Introduction to DON information & Personnel Security Program	Non Resident Training Course	NAVEDTRA 14210	Self-paced	
Automated Digital Network System (ADNS)	NKO/PQS Page	NAVEDTRA 43356		
Tactical Support Center	NKO/PQS Page	NAVEDTRA 43206-2E		

NAVY PROFESSIONAL READING PROGRAM (PRP)

The purpose of the Reading Program is to facilitate the professional and personal development of all Sailors. For additional information on changes, refer to NAVADMIN 309/12 or visit http://navyreading.dodlive.mil/ or http://navy.lib.overdrive.com/ or https://wwwa.nko.navy.mil

ESSENTIAL READING

WARFIGHTING FIRST	**Completed**
1812: The Navy's War *by George C. Daughan*	
Cybersecurity and Cyberwar: What Everyone Needs to Know *by P.W. Singer*	
SEAL of Honor *by Gary Williams*	
Leading with the Heart *by Mike Krzyzewski, Donald T. Phillips, and Grant Hill*	
The Twilight War *by David Crist*	
Wake of the Wahoo *by Forest J. Sterling*	
OPERATE FORWARD	**Completed**
The Crisis of Islam *by Bernard Lewis*	
Execute Against Japan *by LT Joel Holwitt, USN*	
Monsoon *by Robert Kaplan*	
Neptune's Inferno *by James D. Hornfischer*	
Red Star Over the Pacific *by Toshi Yoshihara and James Holmes*	
Fallout *by Catherine Collins and Douglas Frantz*	
BE READY	**Completed**
A Sailor's History of the U.S. Navy *by Thomas Cutler*	
In the Shadow of Greatness *by Joshua Welle, John Ennis, Katherine Kranz and Graham Plaster*	
Navigating the Seven Seas *by Melvin G. Williams, Sr. and Melvin G. Williams, Jr.*	
The Trident: The Forging and Reforging of a Navy SEAL Leader *by Jason Redman and John Bruning*	
Turn the Ship Around *by David Marquet*	
Wired for War *by P.W. Singer*	

Twenty-four additional books are categorized as "recommended reading," and are available as electronic books (e-books). Many can be downloaded at no cost through the Navy general library program site on Navy Knowledge On-line (NKO).

The entire list, with book summaries and additional information is available at http://navyreading.dodlive.mil/

The CNO-PRP has been streamlined to make our Navy's reading program more interactive, affordable, and wherever possible, electronically accessible. To that end: a number of the titles will be available for free at the NKO portal at https://wwwa.nko.navy.mil.

- Click on the reference tab, then e-library audio and e-books tab.
- In order to download books, an "overdrive" account is required. On the top right, click on the overdrive window and follow the prompts.
- Then, not only are the PRP books available, but also hundreds of other items.

Note: Security restrictions preclude downloading via Navy owned computers, so downloading them to personally-owned devices will be required.

E5 RECOMMENDED COMMUNITY READING

Title	**Completed**
Navy/Marine Implementation of National Policy on Control of Compromising Emanation *OPNAVINST C5510.93F*	
Electronic Key Management System (EKMS)	
Automatic Digital Network (AUTODIN) Operating Procedures *NKO/CID/IT Page*	
Navy Information Assurance Program *OPNAVINST 5239.1*	
INMARSAT B High Speed Data Satellite Communication System EE 130-JW-SOM-010 *NKO/CID/IT Page*	
Naval Tactics Techniques Procedure 6-02, C4I Infrastructure; NKO/CID/IT Page	
Naval Warfare Publication 5-01 Naval Operational Planning; NKO/CID/IT Page	
Department of the Navy Security Classification Guides *OPNAVINST 5513.1*	
Department of the Navy Information Security Program *SECNAV M-5510.36*	
ACP 120(Jun01), Common Security Protocol; NKO/CID/IT page *by Allied Communication Publication*	
ACP 121(H), Communication Instructions - General; NKO/CID/IT page *by Allied Communication Publication*	
ACP 122, Information Assurance for Allied Communications and Information Systems; NKO/CID/IT page *by Allied*	

Title	Completed
Communication Publication	
ACP 123(A), Common Messaging Strategy & Procedure; NKO/CID/IT page *by Allied Communication Publication*	
ACP 124(D), Communication Instruction Radio Telegraph Procedure; NKO/CID/IT Page *by Allied Communication Publication*	
Communication Instructions Radiotelephone Procedures; NKO/CID/IT Page *ACP 125(F)*	
ACP 126(C), Communication Instruction Teletypewriter Procedure; NKO/CID/IT page *by Allied Communication Publication*	
ACP 128(A), Allied Telecommunication Record System Operating Procedure; NKO/CID/IT page *by Allied Communication Publication*	
ACP 131, Communication Instructions Operating Signals; NKO/CID/IT page *by Allied Communication Publication*	
ACP 135, Communication Instructions Distress and Rescue Procedures; NKO/CID/IT page *by Allied Communication Publication*	
ACP 142, P_MUL - A Protocol for Reliable MULTICAST Messaging in Bandwidth Constrained and Delayed Acknowledgment(EMCOM) Environments; NKO/CID/IT page *by Allied Communication Publication*	
ACP 160, IFF/SIF Operational Procedures; NKO/CID/IT page *by Allied Communication Publication*	
ACP 167, Glossary of communications Electronics Terms; NKO/CID/IT page *by Allied Communication Publication*	
ACP 220(Jun03), Multination Video Conferencing Services Automatic Digital Network (AUTODIN) Operating Procedures; NKO/CID/IT page *by Allied Communication Publication*	
Federal Information Processing Standard(FIPS) 11-3,Guideline:American National Dictionary for Information Processing Systems *NKO/CID/IT Page*	
Department of Defense 8570 Information Assurance Workforce Improvement Program *NKO/CID/IT Page*	
Federal Information Processing Standard (FIPS) 48, Guideline: On Evaluation of Techniques for Automated Personal Identifications *NKO/CID/IT Page*	
Federal Information Processing Standard FIPS 83, Guidelines on users Authentication Techniques for Computer Network Access Control *NKO/CID/IT Page*	
EE130-AG-HBK-020, Extremely High Frequency (EHF) Low Data Rate (LDR) and Medium Data Rate (MDR) System User's Handbook *NKO/CID/IT Page*	
Joint Army-Navy-Air Force Publication, JANAP 128(J), Automatic Digital Network (AUTODIN) Operating Procedures; NKO/CID/IT Page	
Communication Security Instruction 2000.2, Military Sealift Command Communication Policy and Procedures Manual *NKO/CID/IT page*	
Naval Telecommunications Procedures, NTP 2 Section 1 (E), Navy Super High Frequency Satellite Communications; NKO/CID/IT Page	
Naval Telecommunications Procedures, NTP 2 Section 2 (E), Navy Ultra High Frequency Satellite Communications; NKO/CID/IT Page	
Naval Telecommunications Procedures, NTP 2 Section 3 (B), Navy Extremely High Frequency Satellite Communications; NKO/CID/IT Page	
Naval Telecommunications Procedures, NTP 2 Section 4 (A), Navy Commercial Satellite Communication; NKO/CID/IT Page	
Naval Telecommunications Procedures, NTP 2 Section 5 (Oct01), Navy Satellite Communications (SATCOM) Broadcast Services; NKO/CID/IT Page	
Naval Telecommunications Procedures, NTP 3(K), Telecommunications Users Manual Operating Procedures; NKO/CID/IT Page	
Fleet Communications; NKO/CID/IT Page *NTP 4 (E)*	
Naval Telecommunications Procedures, NTP 21, Defense Message System User's Manual; NKO/CID/IT Page	
Naval Telecommunications Procedures, NTP 22 Defense Message System Local Operations And Network Management Policies and Procedures; NKO/CID/IT Page	

Information Systems Technician
Petty Officer First Class
(Journeyman/Master)

NAME_____

SKILL TRAINING

(Schools, courses and assignments directly related to occupation)

REQUIRED SKILL TRAINING

Course Title	Course Location	CIN/CSE ID	Course Length	Date Completed
See initial skills training from E1-E5 section				

RECOMMENDED SKILL TRAINING

Course Title	Course Location	CIN/CSE/ACE ID	Course Length	Date Completed
Exchange Server 2007 Configurations	MICROSOFT	70-236	Self-paced	
GIAC Certified Incident Handler	GIAC	SEC-504	Self-paced	
Integrated Shipboard Network System (ISNS) for 3.0/3.5/4.0 Family of Systems.	Norfolk VA, San Diego CA,	W-150-0101 / W-150-0800 / W-150-0900	33 days	
Automated Digital Network System (ADNS) Family of Systems variants F and/or H	Various	A-101-1122 / A-101-1125	12 days	
End to End (Prerequisite is ADNS/ISNS/ISSM)	Norfolk VA Pearl Harbor HI San Diego CA Yokosuka, Japan Mayport, FL Everett, WA	A-150-1116	5 days	
Digital Wideband Transmission System (DWTS) Operator	Norfolk, VA / San Diego, CA	A-260-0360	4 days	
Digital Modular Radio(DMR)	Norfolk, VA / San Diego CA	A-260-1955	4 days	
High Frequency Radio Group (HFRG)	San Diego, CA	A-260-0051	10 days	
Theatre Battle Management Core System (TBMCS)	Dam Neck, VA San Diego CA,	A-531-0028	26 days	
Electronic Key Management System Manager	Naples, IT Dam Neck, VA Mayport, FL Groton CT, Kings Bay, GA San Diego, CA Pearl Harbor, HI Kings Bay, GA Yokosuka, Japan Bangor, WA	V-4C-0013	23 days	
Secret Compartmental Information (SCI) Network System Administrator	San Diego CA	W-3B-1112	5 days	
Secret Compartmental Information (SCI) Network Operator	Norfolk, VA/ San Diego CA,	W-3B-1111	12 days	
Commercial Broadband Satellite Program (CBSP) Unit Level/ Force Level or Small Ship variant operator.	Norfolk, VA / San Diego, CA	A-260-0163 / A-260-0165	12 days	
Information and Communication Manager (ICMC)	Norfolk VA, San Diego CA	A-202-0041	19 days	

NAVY ENLISTED CLASSIFICATION CODE (NEC) OPPORTUNITIES

Course Title	Course Location	CIN/CSE/ACE ID	Course Length	Date Completed
2710, 2765, 2766 - Global Command Control System Maritime (GCCS-M) System Administrator for 4.X/ 4.0.3/ 4.1 Family of Systems	Dam Neck, VA / San Diego, CA	A-150-0045 / A-150-3400 / A-150-3500	26 days	
2730 - Navy Tactical Command Support System (NTCSS) II Manager	VirginiaBeach,VA Groton, CT/SanDeigo, CA	A-531-0021	3 weeks 15 Instructional Days	
2791 - System Administrator	Virginia Beach, VA / Groton, CT / Pensacola, FL / San Diego, CA	A-150-1980	18 weeks 90 Instructional Days	
2375 - Tactical Support Center (TSCOMM) Operator Course	Jacksonville, FL	J-201-0816	22 days	
2780 - Network Security Vulnerability Technician (NSVT)	Dam Neck, VAGroton, CTSan Diego, CAKings Bay, GAYokosuka, JapanBangor, WAPearl Harbor, HI	A-531-0022	8 weeks 40 Instructional Days	
2778 - Mission Distribution System Operator	Dam Neck, VA	J-243-2952	19 days	
2301 - Enlisted Frequency Manager	Keesler AFB, MS	A-202-0039	96 days	
2302 - Joint Task Force Spectrum	Keesler AFB, MS	A-202-0008	16 days	
2781 - Advanced Network Analyst	Various	A-531-0045	11 weeks 54 Instructional Days	
2379 - Journeyman Communication Course	Pensacola, FL San Diego, CA Norfolk, VA	A-260-0061	96 days	
2779 - Information Systems Security Manager (ISSM)	Groton CT, Bangor, WA Kings Bay GA, Dam Neck, VA Yokosuka, Japan San Diego CAPearl Harbor, HI	A531-0009	2 weeks 10 Instructional Days	
9613 - Special Operation Radio Operator	Fort Bragg, NC	S-101-0001	159 days	
9502 - Navy Instructor Training Course (NITC)	Various Locations	A-012-0077	19 days	

JOB DESCRIPTION

The IT Technician is comprised of personnel who perform core and specialty functions of Network Administration, Communications Operations and Message Processing.

In the area of **Network Administration**, IT Technicians provide technical assistance to computer system users. They answer questions and/or resolve computer problems for clients. IT Technicians provide assistance concerning the use of computer hardware and software, including printing, installation, word-processing, electronic mail, and operating systems. They conduct help desk functions and repair fiber optics and a variety of cables. Additionally, IT Technicians conduct day-to-day operations such as system backups and restores, and add, modify, or delete user accounts. They install operating systems, applications and peripherals, troubleshoot user problems, debug command language scripts, and assist the Information Systems Security Officer (ISSO) in access control security (i.e., passwords, access and control lists, etc).

They may also perform advanced Network operations, administration, maintenance and training. IT Technicians analyze, design, test, and evaluate network systems, Internet, Intranet, and other data communications systems. They perform network modeling, analysis, and planning. They research and recommend network and data communications hardware and software solutions. IT Technicians may also perform Network Enterprise Architecture | Cyber Security. They defend Navy networks from cyber threats utilizing hardware/software defense in depth methodology to prevent cyber-attacks.

In the area of **Communications Operations**, IT Technicians establish, monitor, and maintain radio frequency (RF) communications systems both ashore and afloat. Specifically, they plan, coordinate establishment, monitor, troubleshoot, and restore classified and unclassified RF communication systems that support exchange of voice, data, video and imagery using terrestrial or satellite VLF, LF, MF, HF, VHF, UHF, SHF and EHF frequency spectrums afloat and ashore. Additionally, specialists in this area may perform spectrum management - coordinate and generate frequency assignments for use within an area of responsibility, assess the impact of new frequency requirements upon the existing radio frequency environment, maintain a history of interference incidents and frequency employment files, initiate action as appropriate to prevent and/or correct harmful interference, and resolve joint and space interference.

In the area of **Message Processing**, IT Technicians provide message handling, storage, and retrieval of incoming and outgoing messages afloat and ashore. They maintain connectivity between shipboard LAN and message delivery systems ashore. They administer user profiles, and maintain directory information trees. IT Technicians operate the Message Systems, NAVMACS, and other automated message processing systems.

RECOMMENDED BILLET ASSIGNMENTS

The Information System Technician of the 21st century operate and maintain the Navy's global satellite telecommunications systems, mainframe computers, local and wide area networks, and micro-computer systems used in the fleet. Administrative support is also provided with the operation of automated equipment that keeps records of personnel training, disbursement, health, assignments and promotions within the Navy. They ensure the all-important communications link between units at sea and stations ashore. Help desk supervisor and Information Watch supervisor for shore and afloat commands. PRIORITY ASSIGNMENT: Sea (diverse platform) Afloat Staff, Special Warfare, BILLET ASSIGNMENT SEA: Communication Center LPO, Automated Information System LPO, IAM, EKMS Manager, Information Assurance LPO SUBSEQUENT ASSIGNMENT: In CONUS Shore Tour (NCTAMS, NCTS, NMCI, Tactical Support Center , NIOC, Afloat Training group, Special Warfare, Center for Information Dominance, White House Communication), Navy Expeditionary Warfare BILLET ASSIGNMENT ASHORE: Communication Center LPO, Automated Information System LPO, Fleet Network Operation Center LPO, Instructor, EKMS Manager, Information Assurance LPO ALTERNATE ASSIGNMENT: Overseas Shore (NCTS, NIOC, STAFF, JOINT, Special Warfare) BILLET ASSIGNMENT ASHORE: Communication Center LPO, Automated Information System LPO, Fleet Network Operation Center LPO, Instructor duty, EKMS Manager, Information Assurance LPO Other Opportunities: Joint Assignments Instructor GSA Support Assignments

PERSONAL AND PROFESSIONAL DEVELOPMENT (Completed at reporting 30 day Career Development Board)

Command Address: _____ QD Phone Number: _____

_____

Division Officer: _____ Phone Number: _____

Leading Chief Petty Officer: _____ Phone Number: _____

Leading Petty Officer: _____ Phone Number: _____

Sponsor/Mentor: _____ Phone Number: _____

Depart/Division Career Counselor: _____ Phone Number: _____

ADSD: _____ REPORT DATE: _____ EAOS: _____ PRD: _____ SEA / SHORE: _____/____
PAYGRADE E6 (3 Years time in service required to be eligible for advancement to E-7)

Date Advanced: _____ Eligible Advancement Date: _____ Number of times up: _____ HYT Date: _____

Security Clearance Level: _____ Date Last updated: _____ Command INDOC complete: _____

CAREER DEVELOPMENT BOARDS: Use OPNAVINST 1040.11(ser) & Career Counselor Handbook NAVPERS 15878
(E6) Reason for Convening/Discussion Items: (Upon completion update (CIMS) Career Information Management System)

Reporting (within 30 days for active duty or three drill weekends for SELRES) (Date Conducted): _____

6 Month: _____ 12 Month: _____ 24 Month: _____36 Month: _____48 Month: _____

60 Month: _____ CPO 365: _____ Special Program: _____ Member Request: _____

HYT 24 months (Date): _____ HYT 12 months (Date): _____ HYT Waiver Date: _____Approve/Disapprove

Career Waypoint 15 months to EAOS: _____ Career Waypoint not approved: _____ CMS/ID 13 months to PRD: _____

Rating Conversion: _____ Navy Formal Training Schools Request ("A"/"C"etc): _____

Transfer: _____ Early Separation: _____ Fleet Reserve Retirement Options:_____

Physical Fitness Test Failure: _____ Career Status Bonus (election message received): _____

Advancement Center: Visit NKO Navy Advancement page located under the Career Management Tab
(Items to collect/discuss: Bibliography for Advancement, Enlisted Advancement Exam Strategy Guide, Profile Sheets)

Selection Board Ineligible/Non-Select: _____ Standard Score 40 or less/failed: _____

Enlisted to Officer Commissioning Program Application & Administration Manual OPNAVINST 1420.1(series):

Commissioning Programs Applications: _____ (prior to submission, command endorsement):_____

Naval Academy _____ Naval Academy Preparatory School (NAPS) _____ Limited Duty Officer _____

Officer Candidate School _____ Seaman to Admiral 21 (STA-21) _____

Medical Enlisted Commissioning Program (MECP) _____ Medical Service Corps In-service Procurement _____

Navy Leader Planning Guide: Log on to NKO and select the Leadership Tab to access this guide.

SELECTION BOARD CHECKLIST FOR E6 PROMOTION TO CPO

Step 1 - Review your Official Record to see what documentation, qualifications, etc. may be missing or requiring an update. This should be accomplished every six months after promotion to Second Class. However, it is imperative that this is accomplished six months prior to a selection board. Check the following three major sections to verify your Official Record:

a. **BUPERS Online**: BUPERS Online (https://www.bol.navy.mil) is your main tool to ensure your record is up to date and helps you to be proactive in making the most of your promotion opportunity. You should review your:
   1. **Official Military Personnel File (OMPF)**: All active duty and reserve personnel having a BOL account, a CAC (with appropriate certificates) and a CAC-enabled computer can now view their OMPF online by selecting the OMPF option on the BOL main menu page. This is the preferred method of obtaining OMPF information to eliminate the unnecessary time-lags caused by waiting days or weeks to receive a requested CD ROM.
   2. **If Deployed:** Click on "*Request Record on CD*" to order your Official Military Personnel File (OMPF). This must be accomplished four to six months before a board convenes, which will allow time for delivery and updating of your record if required.
   3. Check your **Performance Summary Record (PSR)** and **Enlisted Summary Record (ESR)** on https://www.bol.navy.mil, click on the "*ODC, OSR, PSR, ESR*" link.
b. **Electronic Service Record (ESR)** Self-Service ESR: This can be viewed at (https://nsips.nmci.navy.mil) or on the Navy Standard Integrated Personnel System (NSIPS) ESR server onboard ship.
c. **Electronic Training Jacket (ETJ)**: Log-on to Navy Knowledge Online (NKO) and review your entire ETJ making sure that each section is correct. If not, clicking on "*Data Problems*" at the bottom of each page which will guide you on how to make corrections or updates.
d. **US Navy Awards website**: Log onto (https://awards.navy.mil/) to review any awards you may qualify for but were unaware of.

Step 2 - Submit appropriate missing documents to the selection board.

a. Selection board packages provide candidates the opportunity to submit any documents missing from the sections of their records which are viewed by the selection boards. MILPERSMAN 1070-080 specifies which documents from the enlisted permanent personnel record are provided to the selection board for review. Any documents the member has verified as missing from those sections of their permanent personnel record may be submitted as a selection board package.
b. For submissions directly to the board and for those circumstances where the eligible candidate cannot get their official record updated and confirmed prior to the selection board convening date:
   1. All correspondence should be on plain white paper for readability; paper clipped (no staples, binders, folders, or tabs) and submitted under cover letter to the president of the board. Candidates must verify the correct subject line and board number (see below) is on their cover letters to ensure their packages appear before the proper board.
   2. Correspondence must include your Full name and SSN, must be affixed and legible on all documents submitted, and must be postmarked not later than that date listed in the associated NAVADMIN and addressed to:

      NAVY PERSONNEL COMMAND CUSTOMER SERVICE CENTER
      PRESIDENT
      FY-**XX ACTIVE/RESERVE** E7 ENLISTED SELECTION BOARD **#XXX**
      5640 TICONDEROGA LOOP BLDG 768 RM E302
      MILLINGTON TN 38055
      (Active = 360 / SELRES = 335 / FTS = 336)

      (Use of special handling mail (certified or registered) is not advised due to significant delays in handling.)

c. Ensure official record reflects any individual augmentation mission. (awards, evals, NEC, etc).
d. Check http://www.npc.navy.mil/Boards/ActiveDutyEnlisted/GeneralInformation.htm to verify that the selection board has received your correspondence (if sent).

NOTE: It is highly recommended that if corrections or updates are made, review your OMPF, or if Deployed, re-order your CD-Rom to confirm changes. (NOTE: Please allow 60 days for changes to take effect)

Step 3 - After reviewing your service record - such as evaluations, awards, qualifications, etc. - start reviewing what you can do to improve yourself, such as:

a. Request a **Career Development Board (CDB)** through your chain of command.
b. Take a good, hard look at the type of **Collateral Duties** you are assigned. Review your command collateral duties instruction and talk with your COC and / or appear before the CDB. Take the tough command duties that provide the most involvement in the command as a whole and that have direct sailor support.
c. Review your current level of education to see how far along you are in earning a **college degree** and pursue **non-resident Navy courses** to expand your level of knowledge. Complete the **Navy e-Learning courses** on **NKO** that are recommended in this document.
d. Check out **OTHER Learning Opportunities** to add to your service record, such as the CANTRAC Volume I (Training Facilities) and CANTRAC Volume II (Course Descriptions). NKO at Learning > Learning Opportunities

Step 4 - Review qualifications that your rating values or requires for advancement and create a plan to earn these important pieces in the professional growth and advancement puzzle. Read the applicable NAVADMIN for additional dates and information, and review previous selection board precepts.

Step 5 - Prepare for the next CPO Advancement Exam cycle in January for Active Duty & February for Reserves as soon as the Bibliography References are posted six months prior in July. Use the Navy Advancement Center info and website listed above in the advancement section.

Step 6 - CPO365 Phase 1 & 2: See your Chief to obtain the current CPO365 Development Guide (CPODG)

Phase 1: Begins September 17 and concludes when the NAVADMIN announcing CPO selection is released. CPO 365 training is not intended to distract or take away from yours or our FCPOs primary duties, but will serve to enhance their ability to lead. It is used to build the foundation in the year round training cycle. Phase 1 sparks the teamwork and initial training to engage the FCPOs on their road to becoming Chief Petty Officers. It is understood that not all FCPOs will promote to CPO. As much as CPO 365 prepares a person to enter the mess, just as importantly - it also helps our FCPOs to be better workcenter supervisors and Leading Petty Officers. For that reason all FCPOs will participate throughout Phase 1&2, regardless of whether they are board-eligible or have participated in previous years.

Phase 2: Begins when the NAVADMIN announcing CPO selection is released and is designed as the final training period to prepare Selectees for entry into the Chiefs' Mess. This phase culminates with the Final Test, followed by a pinning ceremony on September 16, or a suitable date.
As determined to be appropriate by the CPO mess, all FCPOs will continue to participate in some form of CPO 365 training throughout Phase 2 - when and where practical. It is agreed that there will be several instances where CPO Selectees and non Selects will conduct separate sessions.

QUALIFICATIONS AND CERTIFICATIONS

Sea/Shore General Qualifications **Watch Standing Qualifications**	**Report Date**	**Completion Date** **(If qualification is not required place N/A in this Block)**
Ship Board Fire Fighting		
Aviation Fire Fighting		
Basic Damage Control		
Advanced Damage Control		
3M 301 Maintenance Person		
3M 302 Repair Parts/Supply Petty Officer		
3M 303 Work Center Supervisor		
3M 304 LCPO/Division Officer		
Messenger of the Watch (MOOW)		
Petty Officer of the Watch (POOW)		
Junior Officer of the Deck (JOOD)		
Personal Qualifications Standard		

Mandatory warfare qualification for enlisted Sailors assigned to designated warfare qualifying commands:

Warfare qualification programs	**Report Date**	**Completion Date** **(If qualification is not required place N/A in this Block)**
Aviation Warfare Specialist		
Expeditionary Warfare Specialist		
Fleet Marine Forces		
Information Dominance Warfare Specialist		
Parachute Jumper		
SEABEE Combat Warfare		
Surface Warfare Specialist		

Rate Specific/Department Qualifications (Add)	**Report Date**	**Completion Date** **(If qualification is not required place N/A in this Block)**

CERTIFICATIONS

The following post military occupations are similar to the IT-Information Systems Technician Rating. For more information about these occupations, visit NAVY COOL at https://www.cool.navy.mil/usn/.

Occupation (Civilian Employer)
Broadcast Technicians
Computer and Information Systems Managers
Computer Network Architects
Computer Network Support Specialists
Computer Operators
Computer Programmers
Computer Systems Analysts
Computer User Support Specialists
Computer, Automated Teller, and Office Machine Repairers
Database Administrators
Electronics Engineering Technicians
Information Security Analysts
Information Technology Project Managers
Inspectors, Testers, Sorters, Samplers, and Weighers
Network and Computer Systems Administrators
Radio Operators
Radio, Cellular, and Tower Equipment Installers and Repairers
Telecommunications Engineering Specialists
Telecommunications Equipment Installers and Repairers, Except Line Installers

Occupation (Federal Employer)
0132 - Intelligence Series
0335 - Computer Clerk and Assistant Series
0394 - Communications Clerical Series
2210 - Information Technology Management Series
2608 - Electronic Digital Computer Mechanic
9944 - Electronics Technician

Navy COOL: The following certifications and licenses are applicable to the IT-Information Systems Technician rating. *They may require additional education, training or experience.*

Target paygrade	Certifying Agency	Credential Title	Date Completed
E5	American Board for Certification in Homeland Security (ABCHS)	Certified in Homeland Security Level V (CHS-V)	
E4	AXELOS	ITIL Foundation Level	
E5	Cisco Systems, Inc.	Cisco Certified Design Associate (CCDA)	
E6	Cisco Systems, Inc.	Cisco Certified Design Professional (CCDP)	
E4	Cisco Systems, Inc.	Cisco Certified Entry Networking Technician (CCENT)	
E5	Cisco Systems, Inc.	Cisco Certified Network Associate (CCNA) Routing and Switching	
E4	Cisco Systems, Inc.	Cisco Certified Network Associate (CCNA) Security	
E6	Cisco Systems, Inc.	Cisco Certified Network Professional (CCNP) Routing and Switching	
E5	Cisco Systems, Inc.	Cisco Cybersecurity Specialist	
E3	Computing Technology Industry Association (CompTIA)	CompTIA A+ ce	
E7	Computing Technology Industry Association (CompTIA)	CompTIA Advanced Security Practitioner (CASP) ce	
E4	Computing Technology Industry Association (CompTIA)	CompTIA Linux+ Powered by LPI	
E4	Computing Technology Industry Association (CompTIA)	CompTIA Network+ ce	
E4	Computing Technology Industry Association (CompTIA)	CompTIA Security+ ce	
E5	Computing Technology Industry Association (CompTIA)	CompTIA Server+	
E3	Electronics Technicians Association, International (ETA-I)	Apprentice (APP)	
E4	Electronics Technicians Association, International (ETA-I)	Fiber Optics Installer (FOI)	
E5	Electronics Technicians Association, International (ETA-I)	Fiber Optics Technician (FOT)	
E3	Electronics Technicians Association, International (ETA-I)	General Communications Technician - Level 1 (GCT1)	
E6	Global Information Assurance Certification (GIAC)	GIAC Certified Incident Handler (GCIH)	
E7	Global Information Assurance Certification (GIAC)	GIAC Certified Intrusion Analyst (GCIA)	
E7	Global Information Assurance Certification (GIAC)	GIAC Global Industrial Cyber Security Professional (GICSP)	
E7	Global Information Assurance Certification (GIAC)	GIAC Information Security Fundamentals (GISF)	
E5	Global Information Assurance Certification (GIAC)	GIAC Security Essentials Certification (GSEC)	
E7	Global Information Assurance Certification (GIAC)	GIAC Security Expert (GSE)	
E6	Global Information Assurance Certification (GIAC)	GIAC Security Leadership Certification (GSLC)	
E6	Information Systems Audit and Control Association (ISACA)	Certified Information Security Manager (CISM)	
E6	Information Systems Audit and Control Association (ISACA)	Certified Information Systems Auditor (CISA)	
E5	International Association of Privacy Professionals (IAPP)	Certified Information Privacy Technologist (CIPT)	
E5	International Information Systems Security Certification Consortium, Inc. ((ISC)2)	Associate of ISC2	
E7	International Information Systems Security Certification Consortium, Inc. ((ISC)2)	Certified Information Systems Security Professional (CISSP)	
E5	International Information Systems Security Certification Consortium, Inc. ((ISC)2)	Systems Security Certified Practitioner (SSCP)	
E4	Microsoft Corporation	Microsoft Certified IT Professional (MCITP)	
E3	Microsoft Corporation	Microsoft Certified Professional (MCP)	
E5	Microsoft Corporation	Microsoft Certified Solutions Associate (MCSA): Windows 8	
E5	Microsoft Corporation	Microsoft Certified Solutions Associate (MCSA): Windows Server 2008	
E5	Microsoft Corporation	Microsoft Certified Solutions Associate (MCSA): Windows Server 2012	
E6	Microsoft Corporation	Microsoft Certified Solutions Expert (MCSE): Server Infrastructure	
E4	Microsoft Corporation	Microsoft Certified Technology Specialist (MCTS)	
E5	Microsoft Corporation	Microsoft Certified Trainer (MCT)/Learning Consultant (MCLC)	
E5	Microsoft Corporation	Microsoft Technology Associate (MTA)	
E6	Oracle Corporation	Oracle Certified Professional, Oracle Solaris 10 System Administrator	
E4	Transportation Security Administration	Transportation Worker Identification Credential (TWIC)	

Visit Navy COOL at https://www.cool.navy.mil/usn/ for additional Credentials that you may qualify to earn; however funding may be limited to your GI Bill.

UNITED SERVICES MILITARY APPRENTICESHIP PROGRAM (USMAP):

Rank	Apprenticeship	Date Completed
E1 - E9	Computer Operator	
E1 - E9	Computer Programmer (Professional & Kindred)	
E1 - E9	Electronics Mechanic	
E1 - E9	Electronics Mechanic (Any Industry)	
E1 - E9	Electronics Tester	
E1 - E9	Internetworking Technician	
E1 - E9	Radio Station Operator (Aircraft Mfg)	

Visit USMAP https://usmap.netc.navy.mil/usmapss/static/index.htm for additional information.

STAY NAVY

REENLIST / EXTEND: Request Chit/Form: _____ Career Waypoints-Reenlistment Approval: _____

Selective Training and Reenlistment (STAR): _____ Guaranteed Assignment in Detailing (GUARD 2000): _____

School as a Reenlistment Incentive: _____ Prior Service Reenlistment Eligibility - Reserve (PRISE-R):_____

Career Management System/Interactive Detailing (CMS/ID): _____

Medical/Dental Screening: _____ Command Recommendation (evaluation): _____ Bonus: _____ Ceremony: _____

Career Waypoints-Reenlistment:

The Command Career Counselor is your local advocate to assist you with the Career Waypoints application process.

- E3-E6 Sailors with less than 14 years of service must submit a Career Waypoint application, regardless of reenlistment intentions. Sailors who do not desire to reenlist will submit an "intends to separate" application. Sailors not eligible for reenlistment will submit a "not eligible" application.
- The Career Waypoints system automatically generates most of the applications needed by Sailors. Applications must be submitted no later than 13 months prior to expiration of active obligated service (EAOS) or as extended (SEAOS). Sailors with less than 24 months of contract time remaining at their projected rotation date (PRD) will submit an application 12 months prior to their PRD. In either case, the Career Waypoints system will automatically generate applications for Sailors 15 months prior to either timeframe. Applications required outside of the established C-Way gates can be submitted as Special Circumstance applications. Examples of when these may be needed include OBLISERVE for special duty, decommissioning or homeport shift.
- The C-Way 3-2-1 Process aligns career decisions with the detailing process. Soft End of Active Obligated Service (SEAOS)/End of Active Obligated Service (EAOS) applications are created by C-Way at the 15 month from SEAOS/EAOS mark and must be submitted by the Command Career Counselor at the 13 month mark. This provides time for the Career Counselor to validate the Sailor's information and to ascertain the Sailors career intentions. The first C-Way review gate occurs from 13 to 10 months from SEAOS/EAOS with career choice options of in-rate, conversion, and Selected Reserve. The second review gate occurs from 9 to 7 months from SEAOS/EAOS with career choice options of conversion and Selected Reserve. From 6 months to 3 months to SEAOS/EAOS the Sailor can only choose Selected Reserve affiliation.
- Monthly reenlistment quotas are limited and must be reserved for our best and brightest Sailors who desire to Stay Navy.
  Sailors must choose one of the following based on their desires and qualifications:
  - Reenlist-in-Rate,
  - Reenlist-in-rate, Willing to Convert
  - Convert only
  - SELRES option
  - Intend to separate
  - Not eligible

In February 2014, C-Way delivered auto-approval capabilities to provide reenlistment decisions on SEAOS/EAOS applications more quickly for eligible ratings. This changed the monthly processing of reenlistment applications as described below.

- If you are in an, "open" rating or a "balanced" rating in an undermanned year group or an E-6, you are eligible for reenlistment, and your application is submitted with correct data it will be auto-approved and returned immediately, and you can reenlist.
- If you are in a "competitive" rating or a balanced rating but not an undermanned year group, then your application will be processed through the monthly Rack and Stack process. Applications submitted in one month are processed in Rack and Stack the following month.
- For Nuclear ratings, all applications are reviewed by enlisted community managers on an ongoing basis throughout the processing month.
- If required data is missing (evaluations, Physical Fitness Assessment (PFA) data, security clearance etc.) the application will be denied with a note to your career counselor regarding what needs to be fixed. It is critical the Command Career Counselor reviews these notes to ensure Sailor's are not disadvantaged in their opportunities for retention.

- Upon completion of the monthly process, Career Waypoints results will be available to command users via the Monthly report section of the Career Waypoints system.
- Additional guidance MILPERSMAN 1440-060, NAVADMIN 149/13, NAVADMIN 150/13, and your Career Counselor

TRANSFER:

15 Months	12 Months	9 Months	6 Months	Orders Received
Career Waypoint____	Career Waypoint____	Career Waypoint____	Accept Orders_____	Screening_____
Exception Family Member___	EFM_____	CMS/ID_____	Reverse Sponsor_____	Obligate_____
CMS/ID_____	CMS/ID_____	SRB_____	Relocation (FFSC) ____	Bonus_____
Continuous Overseas Tours (COT) _____			Medical/Dental_____	
Overseas Tour Extension Incentive Program (OTEIP) _____			SRB_____	

For additional assistance in transfer and relocation, go to the Military HOMEFRONT website: http://www.public.navy.mil/bupers-npc/Pages/default.aspx and visit your Fleet and Family Support Center on base.

SEPARATING/RETIRE:

18 -12 months	6 months	90 days	30 days
Transition GPS _____	MED/DEN _____	Copy of Records_____	Copy of Records _____
Complete DD2648PSD_____	Relocation _____	Microfiche CD_____	PSD_____
Transition Planning_____	Relocation Services (FFSC) _____	Arrange Ceremony_____	MED/DEN _____
	Reserve Affiliation_____	Request Leave / PTDY _____	
	VA/DVA_____		

PHYSICAL FITNESS:

Participate in a year-round physical fitness program to meet Navy fitness and BCA standards. Review and verify accuracy of PFA data in PRIMS within 60 days of the PFA cycle. (PRIMS is accessible through your BUPERS Online Account)

Height_____ Weight_____ If Required (Neck_____ Waist_____ Hips (Female) _____ BCA _____)

Last 2 PRT Cycles: Curl-ups_____/_____ Push-ups_____/_____ Run/Swim/Cardio_____/____ Overall Score_____/_____

List date (if) any PRT/BCA failure(s) over the last 5 years _____/_____ List if any Medical Waiver(s)_____/_____

For more information on Navy Fitness, visit: http://www.navyfitness.org/

PROFESSIONAL MILITARY EDUCATION

(Resident and non-resident coursework designed to enhance a Sailor's general military professional knowledge and abilities)

EDUCATION: (Prior to considering any pursuit of off duty education or program enrollment VISIT YOUR NAVY COLLEGE OFFICE or call the Virtual Education Center (VEC)!!!)

Education Plan Completed (Navy College Office/VEC _____Current Education Level_____

Degree Goal_____
Various distance learning degree options are available using, Sailor and Marine Online Academic Advisor (SMOLAA)

Goal: Date: AA/AS _____ BA/BS _____ Master _____
(Credits to earn a degree - AA/AS: 60 SH/90 QH, BA/BS: 120 SH/180, QH, Master /Doctorate: Variable based on program)

Number of current credits _____ American Council on Education (ACE) recommended credits_____

SOC DNS Agreement _____ Joint Service Transcripts (JST) _____ HS Transcripts_____ College Transcripts_____

Date Degree Obtained: AA/AS _____ BA/BS _____ Master _____ Doctorate _____

For entry into JST, send official transcripts to:
Naval Education and Training Professional Development and Technology Center
Attn: JST Operation Center N615
6490 Saufley Field Road
Pensacola, FL 32509
Phone: 1-877-838-1659
Comm: 757-492-4684
FAX: 757-492-5095
DSN: 492-4684
Email: VEC@navy.mil

VOLUNTARY EDUCATION (Study guides and exam preparations and practice test located on NKO)

Academic skills _____ NCPACE _____CLEP _____DSST _____TA _____MGIB _____Post 9/11 GIB_____

E6 REQUIRED NAVY PME:

Course Title	Course Location	CIN/CSE ID	Course Length	Date Completed
Chief Petty Officer Selectee Leadership Course	Command Delivered	CPPD-LEAD09-004	30 hours	
ADAMS for Supervisors	Various Locations	S-501-0120	8 hours	
ADAMS for Facilitators	Various Locations	S-501-0110	16 hours	
Ethics Training	Command Delivered			
Required General Military Training Topics For FY 2016 (Standardized Core Training) [1]				
Antiterrorism Level I Awareness	NKO/Command Delivered	CENSECFOR-AT-010-1.0		
Combating Trafficking in Persons General Awareness	NKO/Command Delivered	DOD-CTIP-1.0		
Counterintelligence Awareness and Reporting	NKO/Command Delivered	DOD-CIAR-1.0		
Cyber Awareness Challenge V3	NKO/Command Delivered	DOD-IAA-V13.0		
Operations Security (Uncle Sam's OPSEC)	NKO/Command Delivered	NIOC-USOPSEC-2.0		
Privacy and Personally Identifiable Information	NKO/Command Delivered	DOD-PII-2.0		
Records Management	NKO/Command Delivered	DOR-RM-010-1.1		
Sexual Assault Prevention and Response Awareness (SAPR)	Command Delivered	CPPD-GMT-SAPRA-1.0 CC		
Equal Opportunity/Sexual Harassment/Grievance Procedures [2]	Command Delivered	CPPD-GMT-EOSH-1.0		
Suicide Prevention	Command Delivered	CPPD-GMT-SAP-1.0		
Required General Military Training Topics For FY 2016 (Command-Assigned Readiness –Enhancement topics; biennial periodicity) [3]				
Alcohol, Drug, and Tobacco Awareness	Command Delivered	CPPD-GMT-ADTA-1.0		
Domestic Violence Prevention and Reporting	NKO/Command Delivered	CPPD-GMT-DV-1.0		
Sexual Health and Responsibility	NKO/Command Delivered	CPPD-GMT-SHR-1.0		
Stress Management	Command Delivered	CPPD-GMT-SM-1.0		

1 - Verify GMT topics on NKO GMT web page.
2 - Course should be delivered in conjunction with SAPR. If not practicable, separate training is still required.
3 - Topics to be delivered once per deployment cycle. If deployment cycle is not applicable or exceeds two years between deployments, then deliver once every two years.

E6 REQUIRED COMMUNITY PME:

Course Title	Course Location	CIN/CSE ID	Course Length	Date Completed
Electronic Key Management System	NKO/PQS Page	NAVEDTRA 43462-1B	Self-paced	
Navy Radio Communications Afloat	NKO/PQS Page	NAVEDTRA 43355-2	Self-paced	
Special Intelligence Afloat Communication	NKO/PQS Page	NAVEDTRA 43551-3B	Self-paced	
Information Assurance Technician	NKO/PQS Page	NAVEDTRA 43469	Self-paced	
Information Systems and Telecommunications Clerk	NKO/PQS Page	NAVEDTRA 43355-G		
Navy Networks	NKO/PQS Page	NAVEDTRA 43355-1		

E6 RECOMMENDED NAVY PME:

Course Title	Course Location	CIN/CSE ID	Course Length	Date Completed
Leadership Core Continuum (LCC)	Command Delivered	CPPD10-LCC (Series)	6 hours	
Military Requirements for Chief Petty Officer (EDITION 1/1/1991)		NAVEDTRA 14144		
Basic Enlisted Professional Military Education (BEPME)	NKO	Military DON/ PME	20 hours	
Block 1 Basic EPME - Introduction	NKO	EPME-BASIC-B1		
Block 2 Basic EPME - Navy History and Heritage	NKO	EPME-BASIC-B2		
Block 3 Basic EPME - The Navy Professional	NKO	EPME-BASIC-B3		
Block 4 Basic EPME - Organization and Guidance	NKO	EPME-BASIC-B4		
Block 5 Basic EPME - Planning	NKO	EPME-BASIC-B5		
Block 6 Basic EPME - Regional Expertise and Cultural Awareness	NKO	EPME-BASIC-B6		
Block 7 Basic EPME - Technology for the Warfighter	NKO	EPME-BASIC-B7		
Block 8 Basic EPME - Conclusion	NKO	EPME-BASIC-B8		
Navy Reserve Fundamentals for Active Duty Course	NKO	NAVRESFOR-NRF-3.0	10 hours	
Nutrition	NKO	NMHCI2107V2.1	1 hour	
Culture	NKO or College Course	Foreign Language and Culture	45 hours	
Communication	College Course		45 hours	
English 101	College Course		45 hours	
English Reading	College Course		45 hours	
English Writing	College Course		45 hours	
Geography	College Course		45 hours	
History	College Course		45 hours	
Humanities	College Course		45 hours	
Language and Literature Study Guides	College Course		45 hours	
Math	College Course		45 hours	
Physical Sciences	College Course		45 hours	
Social Sciences	College Course		45 hours	
Speech	College Course		45 hours	
Recommended General Military Training Topics For FY 2016 (Delivery determined by command discretion) [1]				
Energy Policy	Command Delivered	OPNAV-GMTE-1.0		
Hazing Policy and Prevention	Command Delivered	CPPD-GMT-HPP-1.0		
Operational Risk Management	NKO/Command Delivered	CPPD-GMT-ORM-1.0		
Personal Financial Management	Command Delivered	CPPD-GMT-PFM16-1.0		
Physical Readiness	NKO/Command Delivered	CPPD-GMT-PRT-2.0		

1 - Verify GMT topics on NKO GMT web page.

Courses with Recommended Reserve Points:

Commander Navy Reserve Forces (CNRF) N7 determines the number of reserve points awarded for completion of a course taken on Navy E-Learning. This listing should only be used as a guide and is subject to change by direction of CNFR N7.

Navy E-Learning has no control over how many, if any, reserve points are eventually awarded for the completion of a course. All questions concerning the award of reserve points should be directed to CNFR N7.

E6 RECOMMENDED RESERVE PME:

Course Title	Course Location	CIN/CSE ID	Course Length	Date Completed
NROWS Orders Administration Course	NKO	R-500-0140/02PG /DoN	8 hours	
Naval Reserve Center Commanding Officer Officer In Charge	NKO	CNRFC-COOIC-1.0 /DoN	8 hours	
Guidance for Mobilization	NKO	CNRFC-GMB-1.1 /DoN	4 hours	
Military Sealift Command 101	NKO	CNRFC-MSC101 /DoN 1.1	24 hours	
Non-Prior Service Accession Program	NKO	CNRFC-NPSAP-2 /DoN 0	23 hours	

E6 RECOMMENDED COMMUNITY PME:

Course Title	Course Location	CIN/CSE ID	Course Length	Date Completed
Automated Digital Network System (ADNS)	NKO/PQS Page	NAVEDTRA 43356		
Information Assurance (IA)	NKO/PQS Page	NAVEDTRA 43466		
LCS Exterior Communications (EXCOMM) System	NKO/PQS Page	NAVEDTRA 43101-4	Self-paced	
Tactical Support Center (TSC) Information Systems Manager	NKO/PQS Page	NAVEDTRA 43206-2D	Self-paced	
SI Afloat Communications	NKO/PQS Page	NAVEDTRA 43551-3		

NAVY PROFESSIONAL READING PROGRAM (PRP)

The purpose of the Reading Program is to facilitate the professional and personal development of all Sailors. For additional information on changes, refer to NAVADMIN 309/12 or visit http://navyreading.dodlive.mil/ or http://navy.lib.overdrive.com/ or https://wwwa.nko.navy.mil

ESSENTIAL READING

WARFIGHTING FIRST	**Completed**
1812: The Navy's War *by George C. Daughan*	
Cybersecurity and Cyberwar: What Everyone Needs to Know *by P.W. Singer*	
SEAL of Honor *by Gary Williams*	
Leading with the Heart *by Mike Krzyzewski, Donald T. Phillips, and Grant Hill*	
The Twilight War *by David Crist*	
Wake of the Wahoo *by Forest J. Sterling*	
OPERATE FORWARD	**Completed**
The Crisis of Islam *by Bernard Lewis*	
Execute Against Japan *by LT Joel Holwitt, USN*	
Monsoon *by Robert Kaplan*	
Neptune's Inferno *by James D. Hornfischer*	
Red Star Over the Pacific *by Toshi Yoshihara and James Holmes*	
Fallout *by Catherine Collins and Douglas Frantz*	
BE READY	**Completed**
A Sailor's History of the U.S. Navy *by Thomas Cutler*	
In the Shadow of Greatness *by Joshua Welle, John Ennis, Katherine Kranz and Graham Plaster*	
Navigating the Seven Seas *by Melvin G. Williams, Sr. and Melvin G. Williams, Jr.*	
The Trident: The Forging and Reforging of a Navy SEAL Leader *by Jason Redman and John Bruning*	
Turn the Ship Around *by David Marquet*	
Wired for War *by P.W. Singer*	

Twenty-four additional books are categorized as "recommended reading," and are available as electronic books (e-books). Many can be downloaded at no cost through the Navy general library program site on Navy Knowledge On-line (NKO).

The entire list, with book summaries and additional information is available at http://navyreading.dodlive.mil/

The CNO-PRP has been streamlined to make our Navy's reading program more interactive, affordable, and wherever possible, electronically accessible. To that end: a number of the titles will be available for free at the NKO portal at https://wwwa.nko.navy.mil.

- Click on the reference tab, then e-library audio and e-books tab.
- In order to download books, an "overdrive" account is required. On the top right, click on the overdrive window and follow the prompts.
- Then, not only are the PRP books available, but also hundreds of other items.

Note: Security restrictions preclude downloading via Navy owned computers, so downloading them to personally-owned devices will be required.

E6 RECOMMENDED COMMUNITY READING

Title	**Completed**
ACP 110; NKO/CID/IT page *by Allied Communication Publication*	
ACP 100, NATO SUPP-1 AIGs Instructions and Assignments ; NKO/CID/IT page *by Allied Communication Publication*	
ACP 120(Jun01), Common Security Protocol; NKO/CID/IT page *by Allied Communication Publication*	
ACP 121(H), Communication Instructions - General; NKO/CID/IT page *by Allied Communication Publication*	
ACP 122, Information Assurance for Allied Communications and Information Systems; NKO/CID/IT page *by Allied Communication Publication*	
ACP 123(A), Common Messaging Strategy & Procedure; NKO/CID/IT page *by Allied Communication Publication*	
ACP 124(D), Communication Instruction Radio Telegraph Procedure; NKO/CID/IT Page *by Allied Communication Publication*	
Communication Instructions Radiotelephone Procedures; NKO/CID/IT Page *ACP 125(F)*	
ACP 126(C), Communication Instruction Teletypewriter Procedure; NKO/CID/IT page *by Allied Communication*	

Title	Completed
Publication	
ACP 128(A), Allied Telecommunication Record System Operating Procedure; NKO/CID/IT page *by Allied Communication Publication*	
ACP 131, Communication Instructions Operating Signals; NKO/CID/IT page *by Allied Communication Publication*	
ACP 135, Communication Instructions Distress and Rescue Procedures; NKO/CID/IT page *by Allied Communication Publication*	
ACP 142, P_MUL - A Protocol for Reliable MULTICAST Messaging in Bandwidth Constrained and Delayed Acknowledgment(EMCOM) Environments; NKO/CID/IT page *by Allied Communication Publication*	
ACP 160, IFF/SIF Operational Procedures; NKO/CID/IT page *by Allied Communication Publication*	
ACP 167, Glossary of communications Electronics Terms; NKO/CID/IT page *by Allied Communication Publication*	
ACP 190 SUPP-1, Guide to Electromagnetic Spectrum Management in Military Operations; NKO/CID/IT page *by Allied Communication Publication*	
ACP 191, Ionospheric Sounder Operations; NKO/CID/IT page *by Allied Communication Publication*	
ACP 193, Ground Routing Protocol for use with Automatic Link Establishment (ALR) Capable HF Radios; NKO/CID/IT page *by Allied Communication Publication*	
ACP 220(Jun03), Multination Video Conferencing Services Automatic Digital Network (AUTODIN) Operating Procedures; NKO/CID/IT page *by Allied Communication Publication*	
Automatic Digital Network (AUTODIN) Operating Procedures *NKO/CID/IT Page*	
C4I IT21 Manager *NKO/CID/IT page*	
CMS-6 *NKO/CID/IT page*	
Communication Security Instruction 2000.2, Military Sealift Command Communication Policy and Procedures Manual *NKO/CID/IT page*	
Department of Defense Instruction 8500.2 *NKO/CID/IT page*	
Department of Defense Instruction 8510.1 *NKO/CID/IT page*	
Department of Defense Instruction 8510.BB *NKO/CID/IT page*	
Electronic Key Management System (EKMS)	
EE130-AG-HBK-020, Extremely High Frequency (EHF) Low Data Rate (LDR) and Medium Data Rate (MDR) System User's Handbook *NKO/CID/IT Page*	
Federal Information Processing Standard FIPS 83, Guidelines on users Authentication Techniques for Computer Network Access Control *NKO/CID/IT Page*	
Federal Information Processing Standard (FIPS) 48, Guideline: On Evaluation of Techniques for Automated Personal Identifications *NKO/CID/IT Page*	
Federal Information Processing Standard(FIPS) 11-3,Guideline:American National Dictionary for Information Processing Systems *NKO/CID/IT Page*	
INMARSAT B High Speed Data Satellite Communication System EE 130-JW-SOM-010 *NKO/CID/IT Page*	
Joint Army-Navy-Air Force Publication, JANAP 128(J), Automatic Digital Network (AUTODIN) Operating Procedures; NKO/CID/IT Page	
National Security Agency NAG 16 (F) *NKO/CID/IT page*	
Naval Tactics Techniques Procedure 6-02, C4I Infrastructure; NKO/CID/IT Page	
Naval Telecommunications Procedures, NTP 2 Section 1 (E), Navy Super High Frequency Satellite Communications; NKO/CID/IT Page	
Naval Telecommunications Procedures, NTP 2 Section 2 (E), Navy Ultra High Frequency Satellite Communications; NKO/CID/IT Page	
Naval Telecommunications Procedures, NTP 2 Section 3 (B), Navy Extremely High Frequency Satellite Communications; NKO/CID/IT Page	
Naval Telecommunications Procedures, NTP 2 Section 4 (A), Navy Commercial Satellite Communication; NKO/CID/IT page	
Naval Telecommunications Procedures, NTP 2 Section 5 (Oct01), Navy Satellite Communications (SATCOM) Broadcast Services; NKO/CID/IT page	
Naval Telecommunications Procedures, NTP 3(K), Telecommunications Users Manual Operating Procedures; NKO/CID/IT page	
Fleet Communications; NKO/CID/IT Page *NTP 4 (E)*	
Naval Telecommunications Procedures, NTP 21, Defense Message System User's Manual; NKO/CID/IT Page	

Title	Completed
Naval Telecommunications Procedures, NTP 22 Defense Message System Local Operations And Network Management Policies and Procedures; NKO/CID/IT Page	
Naval Warfare Publication 1-03.1 Operational Reports; NKO/CID/IT page	
Naval Warfare Publication 5-01 Naval Operational Planning; NKO/CID/IT Page	
Operational Naval Instruction 3100.6 *NKO/CID/IT page*	
Navy/Marine Implementation of National Policy on Control of Compromising Emanation *OPNAVINST C5510.93F*	
Department of the Navy Security Classification Guides *OPNAVINST 5513.1*	
Navy Information Assurance Program *OPNAVINST 5239.1*	
Department of the Navy Personnel Security Program *SECNAV M-5510.30 Series*	
Department of the Navy Information Security Program *SECNAV M-5510.36*	
Department of the Navy Policy for Publicly Accessible World Wide Sites *SECNAV M-5720.47A*	

Information Systems Technician
Chief Petty Officer
(Master)

NAME_____

SKILL TRAINING

(Schools, courses and assignments directly related to occupation)

REQUIRED SKILL TRAINING

Course Title	Course Location	CIN/CSE ID	Course Length	Date Completed
See initial skills training from E1-E6 section				

RECOMMENDED SKILL TRAINING

Course Title	Course Location	CIN/CSE/ACE ID	Course Length	Date Completed
Senior Enlisted Academy (SEA)	Newport, RI	P-920-1300	3 weeks 70 hours of PPME on NKO and 3 weeks resident	
GIAC Information Security Fundamentals	Global Information Assurance Certification	GISF		
GIAC Certified Intrusion Analyst	Global Information Assurance Certification	GCIA		
Six Sigma Green Belt (CSSGB)	ASQ			
Integrated Shipboard Network System (ISNS) for 3.0/3.5/4.0 Family of Systems.	Norfolk VA, San Diego CA,	W-150-0101 / W-150-0800 / W-150-0900	33 days	
Automated Digital Network System (ADNS) Family of Systems variants F and/or H	Various	A-101-1122 / A-101-1125	12 days	
End to End (Prerequisite is ADNS/ISNS/ISSM)	Norfolk VA Pearl Harbor HI San Diego CA Yokosuka, Japan Mayport, FL Everett, WA	A-150-1116	5 days	
Digital Wideband Transmission System (DWTS) Operator	Norfolk, VA / San Diego, CA	A-260-0360	4 days	
Digital Modular Radio(DMR)	Norfolk, VA / San Diego CA	A-260-1955	4 days	
High Frequency Radio Group (HFRG)	San Diego, CA	A-260-0051	10 days	
Electronic Key Management System Manager	Naples, IT Dam Neck, VA Mayport, FL Groton CT, Kings Bay, GA San Diego, CA Pearl Harbor, HI Kings Bay, GA Yokosuka, Japan Bangor, WA	V-4C-0013	23 days	
Secret Compartmental Information (SCI) Network System Administrator	San Diego CA	W-3B-1112	5 days	
Secret Compartmental Information (SCI) Network Operator	Norfolk, VA/ San Diego CA,	W-3B-1111	12 days	
Commercial Broadband Satellite Program (CBSP) Unit Level/ Force Level or Small Ship variant operator.	Norfolk, VA / San Diego, CA	A-260-0163 / A-260-0165	12 days	
Information and Communication Manager (ICMC)	Norfolk VA, San Diego CA	A-202-0041	19 days	

NAVY ENLISTED CLASSIFICATION CODE (NEC) OPPORTUNITIES

Course Title	Course Location	CIN/CSE/ACE ID	Course Length	Date Completed
2710, 2765, 2766 - Global Command Control System Maritime (GCCS-M) System Administrator for 4.X/ 4.0.3/ 4.1 Family of Systems	Dam Neck, VA / San Diego, CA	A-150-0045 / A-150-3400 / A-150-3500	26 days	
2791 - System Administrator	Virginia Beach, VA / Groton, CT / Pensacola, FL / San Diego, CA	A-150-1980	18 weeks 90 Instructional Days	
2375 - Tactical Support Center (TSCOMM) Operator Course	Jacksonville, FL	J-201-0816	22 days	
2780 - Network Security Vulnerability Technician (NSVT)	Dam Neck, VAGroton, CTSan Diego, CAKings Bay, GAYokosuka, JapanBangor, WAPearl Harbor, HI	A-531-0022	8 weeks 40 Instructional Days	
2778 - Mission Distribution System Operator	Dam Neck, VA	J-243-2952	19 days	
2301 - Enlisted Frequency Manager	Keesler AFB, MS	A-202-0039	96 days	
2302 - Joint Task Force Spectrum	Keesler AFB, MS	A-202-0008	16 days	
2781 - Advanced Network Analyst	Various	A-531-0045	11 weeks 54 Instructional Days	
2379 - Journeyman Communication Course	Pensacola, FL San Diego, CA Norfolk, VA	A-260-0061	96 days	
2779 - Information Systems Security Manager (ISSM)	Groton CT, Bangor, WA Kings Bay GA, Dam Neck, VA Yokosuka, Japan San Diego CAPearl Harbor, HI	A531-0009	2 weeks 10 Instructional Days	
9613 - Special Operation Radio Operator	Fort Bragg, NC	S-101-0001	159 days	
9502 - Navy Instructor Training Course (NITC)	Various Locations	A-012-0077	19 days	

JOB DESCRIPTION

The IT Technician is comprised of personnel who perform core and specialty functions of Network Administration, Communications Operations and Message Processing.

In the area of **Network Administration**, IT Technicians provide technical assistance to computer system users. They answer questions and/or resolve computer problems for clients. IT Technicians provide assistance concerning the use of computer hardware and software, including printing, installation, word-processing, electronic mail, and operating systems. They conduct help desk functions and repair fiber optics and a variety of cables. Additionally, IT Technicians conduct day-to-day operations such as system backups and restores, and add, modify, or delete user accounts. They install operating systems, applications and peripherals, troubleshoot user problems, debug command language scripts, and assist the Information Systems Security Officer (ISSO) in access control security (i.e., passwords, access and control lists, etc).

They may also perform advanced Network operations, administration, maintenance and training. IT Technicians analyze, design, test, and evaluate network systems, Internet, Intranet, and other data communications systems. They perform network modeling, analysis, and planning. They research and recommend network and data communications hardware and software solutions. IT Technicians may also perform Network Enterprise Architecture | Cyber Security. They defend Navy networks from cyber threats utilizing hardware/software defense in depth methodology to prevent cyber-attacks.

In the area of **Communications Operations**, IT Technicians establish, monitor, and maintain radio frequency (RF) communications systems both ashore and afloat. Specifically, they plan, coordinate establishment, monitor, troubleshoot, and restore classified and unclassified RF communication systems that support exchange of voice, data, video and imagery using terrestrial or satellite VLF, LF, MF, HF, VHF, UHF, SHF and EHF frequency spectrums afloat and ashore. Additionally, specialists in this area may perform spectrum management - coordinate and generate frequency assignments for use within an area of responsibility, assess the impact of new frequency requirements upon the existing radio frequency environment, maintain a history of interference incidents and frequency employment files, initiate action as appropriate to prevent and/or correct harmful interference, and resolve joint and space interference.

In the area of **Message Processing**, IT Technicians provide message handling, storage, and retrieval of incoming and outgoing messages afloat and ashore. They maintain connectivity between shipboard LAN and message delivery systems ashore. They administer user profiles, and maintain directory information trees. IT Technicians operate NAVMACS and other automated message processing systems.

RECOMMENDED BILLET ASSIGNMENTS

The Information System Technician of the 21st century operate and maintain the Navy's global satellite telecommunications systems, local and wide area networks, and micro-computer systems used in the fleet. Advanced global C4I support is provided it units ashore and sea.

PRIORITY ASSIGNMENT: Sea (diverse platform) Afloat Staff, Special Warfare, Navy Expeditionary Warfare

BILLET ASSIGNMENT SEA: Communication Center LCPO, Automated Information System LCPO, IAM, EKMS Manager, Information Assurance LCPO, Spectrum Management, EKMS Inspector

SUBSEQUENT ASSIGNMENT: In CONUS Shore Tour (NCTAMS, NCTS, NMCI, Tactical Support Center, NIOC, Afloat Training Group, Center for Information Dominance)

BILLET ASSIGNMENT ASHORE: Communication Center LCPO, Automated Information System LCPO, Fleet Network Operation Center LCPO, Instructor, EKMS Manager, Information Assurance LCPO, Spectrum Management

ALTERNATE ASSIGNMENT: Overseas Shore (Communications Station, NIOC, STAFF, JOINT, Special Warfare), Navy Expeditionary Warfare

BILLET ASSIGNMENT ASHORE: Communication Center LCPO, Automated Information System LCPO, Fleet Network Operation Center LCPO, Instructor duty, EKMS Manager, Information Assurance LCPO, Spectrum Management, EKMS Inspector Other Opportunities: Joint Assignments Communications Special Programs (GSA) Global Support Assignments

PERSONAL AND PROFESSIONAL DEVELOPMENT (Completed at reporting 30 day Career Development Board)

Command Address: _____ QD Phone Number: _____

_____

Division Officer: _____ Phone Number: _____

Leading Chief Petty Officer: _____ Phone Number: _____

Leading Petty Officer: _____ Phone Number: _____

Sponsor/Mentor: _____ Phone Number: _____

Depart/Division Career Counselor: _____ Phone Number: _____

ADSD: _____ REPORT DATE: _____ EAOS: _____ PRD: _____ SEA / SHORE: _____/____
PAYGRADE E7 (3 Years time in service required to be eligible for advancement to E-8)

Date Advanced: _____ Eligible Advancement Date: _____ Number of times up: _____ HYT Date: _____

Security Clearance Level: _____ Date Last updated: _____ Command INDOC complete: _____

CAREER DEVELOPMENT BOARDS: Use OPNAVINST 1040.11(ser) & Career Counselor Handbook NAVPERS 15878
(E7) Reason for Convening/Discussion Items: (Upon completion update (CIMS) Career Information Management System)

Reporting (within 30 days for active duty or three drill weekends for SELRES) (Date Conducted): _____

6 Month: _____ 12 Month: _____ 24 Month: _____36 Month: _____48 Month: _____

60 Month: _____ CPO 365: _____ Special Program: _____ Member Request: _____

HYT 24 months (Date): _____ HYT 12 months (Date): _____ HYT Waiver Date: _____Approve/Disapprove

CMS/ID 13 months to PRD: _____ Transfer: _____

Rating Conversion: _____ Navy Formal Training Schools Request ("A"/"C"etc): _____

Early Separation: _____ Fleet Reserve Retirement Options:_____

Physical Fitness Test Failure: _____ Career Status Bonus (election message received): _____

Advancement Center: Visit NKO Navy Advancement page located under the Career Management Tab
(Items to collect/discuss: Bibliography for Advancement, Enlisted Advancement Exam Strategy Guide, Profile Sheets)

Non-Select: _____

Enlisted to Officer Commissioning Program Application & Administration Manual OPNAVINST 1420.1(series):

Commissioning Programs Applications: _____ (prior to submission, command endorsement):_____

Medical Enlisted Commissioning Program (MECP) _____ Medical Service Corps In-service Procurement _____

Officer Candidate School _____ Limited Duty Officer _____ Chief Warrant Officer _____

Navy Leader Planning Guide: Log on to NKO and select the Leadership Tab to access this guide.

SELECTION BOARD CHECKLIST FOR CPO PROMOTION TO SCPO

Step 1 - Review your Official Record to see what documentation, qualifications, etc. may be missing or requiring an update. This should be accomplished every six months after promotion to Second Class. However, it is imperative that this is accomplished six months prior to a selection board. Check the following three major sections to verify your Official Record:

a. **BUPERS Online**: BUPERS Online (https://www.bol.navy.mil) is your main tool to ensure your record is up to date and helps you to be proactive in making the most of your promotion opportunity. You should review your:
   1. **Official Military Personnel File (OMPF)**: All active duty and reserve personnel having a BOL account, a CAC (with appropriate certificates) and a CAC-enabled computer can now view their OMPF online by selecting the OMPF option on the BOL main menu page. This is the preferred method of obtaining OMPF information to eliminate the unnecessary time-lags caused by waiting days or weeks to receive a requested CD ROM.
   2. **If Deployed:** Click on "*Request Record on CD*" to order your Official Military Personnel File (OMPF). This must be accomplished four to six months before a board convenes, which will allow time for delivery and updating of your record if required.
   3. Check your **Performance Summary Record (PSR)** and **Enlisted Summary Record (ESR)** on https://www.bol.navy.mil, click on the "*ODC, OSR, PSR, ESR*" link.
b. **Electronic Service Record (ESR)** Self-Service ESR: This can be viewed at (https://nsips.nmci.navy.mil) or on the Navy Standard Integrated Personnel System (NSIPS) ESR server onboard ship.
c. **Electronic Training Jacket (ETJ)**: Log-on to Navy Knowledge Online (NKO) and review your entire ETJ making sure that each section is correct. If not, clicking on "*Data Problems*" at the bottom of each page which will guide you on how to make corrections or updates.
d. **US Navy Awards website**: Log onto (https://awards.navy.mil/) to review any awards you may qualify for but were unaware of.

Step 2 - Submit appropriate missing documents to the selection board.

a. Selection board packages provide candidates the opportunity to submit any documents missing from the sections of their records which are viewed by the selection boards. MILPERSMAN 1070-080 specifies which documents from the enlisted permanent personnel record are provided to the selection board for review. Any documents the member has verified as missing from those sections of their permanent personnel record may be submitted as a selection board package.
b. For submissions directly to the board and for those circumstances where the eligible candidate cannot get their official record updated and confirmed prior to the selection board convening date:
   1. All correspondence should be on plain white paper for readability; paper clipped (no staples, binders, folders, or tabs) and submitted under cover letter to the president of the board. Candidates must verify the correct subject line and board number (see below) is on their cover letters to ensure their packages appear before the proper board.
   2. Correspondence must include your Full name and SSN, must be affixed and legible on all documents submitted, and must be postmarked not later than that date listed in the associated NAVADMIN and addressed to:

      NAVY PERSONNEL COMMAND CUSTOMER SERVICE CENTER
      PRESIDENT
      FY-**XX ACTIVE/RESERVE** E8 ENLISTED SELECTION BOARD **#XXX**
      5640 TICONDEROGA LOOP BLDG 768 RM E302
      MILLINGTON TN 38055
      (Active = 235 / SELRES = 205 / FTS = 206)

      (Use of special handling mail (certified or registered) is not advised due to significant delays in handling.)

c. Ensure official record reflects any individual augmentation mission. (awards, evals, NEC, etc).
d. Check http://www.npc.navy.mil/Boards/ActiveDutyEnlisted/GeneralInformation.htm to verify that the selection board has received your correspondence (if sent).

NOTE: It is highly recommended that if corrections or updates are made, review your OMPF, or if Deployed, re-order your CD-Rom to confirm changes. (NOTE: Please allow 60 days for changes to take effect)

Step 3 - After reviewing your service record - such as evaluations, awards, qualifications, etc. - start reviewing what you can do to improve yourself, such as:

a. Request a **Career Development Board (CDB)** through your chain of command.
b. Take a good, hard look at the type of **Collateral Duties** you are assigned. Review your command collateral duties instruction and talk with your COC and / or appear before the CDB. Take the tough command duties that provide the most involvement in the command as a whole and that have direct sailor support.
c. Review your current level of education to see how far along you are in earning a **college degree** and pursue **non-resident Navy courses** to expand your level of knowledge. Complete the **Navy e-Learning courses** on **NKO** that are recommended in this document.
d. Check out **OTHER Learning Opportunities** to add to your service record, such as the CANTRAC Volume I (Training Facilities) and CANTRAC Volume II (Course Descriptions). NKO at Learning > Learning Opportunities

Step 4 - Review qualifications that your rating values or requires for advancement and create a plan to earn these important pieces in the professional growth and advancement puzzle. Read the applicable NAVADMIN for additional dates and information, and review previous selection board precepts.

QUALIFICATIONS AND CERTIFICATIONS

Sea/Shore General Qualifications **Watch Standing Qualifications**	**Report Date**	**Completion Date** **(If qualification is not required place N/A in this Block)**
Ship Board Fire Fighting		
Aviation Fire Fighting		
Basic Damage Control		
Advanced Damage Control		
3M 303 Work Center Supervisor		
3M 304 LCPO/Division Officer		
Section Leader		
Officer of the Deck (OOD) (In Port)		
Command Duty Officer (CDO)		
Junior Officer of the Deck (JOOD) (At Sea)		
Officer of the Deck (OOD) (At Sea)		
Personal Qualifications Standard		

Mandatory warfare qualification for enlisted Sailors assigned to designated warfare qualifying commands:

Warfare qualification programs	**Report Date**	**Completion Date** **(If qualification is not required place N/A in this Block)**
Aviation Warfare Specialist		
Expeditionary Warfare Specialist		
Fleet Marine Forces		
Information Dominance Warfare Specialist		
SEABEE Combat Warfare		
Surface Warfare Specialist		
Parachute Jumper		

Rate Specific/Department Qualifications (Add)	**Report Date**	**Completion Date** **(If qualification is not required place N/A in this Block)**

CERTIFICATIONS

The following post military occupations are similar to the IT-Information Systems Technician Rating. For more information about these occupations, visit NAVY COOL at https://www.cool.navy.mil/usn/.

Occupation (Civilian Employer)
Broadcast Technicians
Computer and Information Systems Managers
Computer Network Architects
Computer Network Support Specialists
Computer Operators
Computer Programmers
Computer Systems Analysts
Computer User Support Specialists
Computer, Automated Teller, and Office Machine Repairers
Database Administrators
Electronics Engineering Technicians
Information Security Analysts
Information Technology Project Managers
Inspectors, Testers, Sorters, Samplers, and Weighers
Network and Computer Systems Administrators
Radio Operators
Radio, Cellular, and Tower Equipment Installers and Repairers
Telecommunications Engineering Specialists
Telecommunications Equipment Installers and Repairers, Except Line Installers

Occupation (Federal Employer)
0132 - Intelligence Series
0335 - Computer Clerk and Assistant Series
0394 - Communications Clerical Series
2210 - Information Technology Management Series
2608 - Electronic Digital Computer Mechanic
9944 - Electronics Technician

Navy COOL: The following certifications and licenses are applicable to the IT-Information Systems Technician rating. *They may require additional education, training or experience.*

Target paygrade	Certifying Agency	Credential Title	Date Completed
E5	American Board for Certification in Homeland Security (ABCHS)	Certified in Homeland Security Level V (CHS-V)	
E4	AXELOS	ITIL Foundation Level	
E5	Cisco Systems, Inc.	Cisco Certified Design Associate (CCDA)	
E6	Cisco Systems, Inc.	Cisco Certified Design Professional (CCDP)	
E4	Cisco Systems, Inc.	Cisco Certified Entry Networking Technician (CCENT)	
E5	Cisco Systems, Inc.	Cisco Certified Network Associate (CCNA) Routing and Switching	
E4	Cisco Systems, Inc.	Cisco Certified Network Associate (CCNA) Security	
E6	Cisco Systems, Inc.	Cisco Certified Network Professional (CCNP) Routing and Switching	
E5	Cisco Systems, Inc.	Cisco Cybersecurity Specialist	
E3	Computing Technology Industry Association (CompTIA)	CompTIA A+ ce	
E7	Computing Technology Industry Association (CompTIA)	CompTIA Advanced Security Practitioner (CASP) ce	
E4	Computing Technology Industry Association (CompTIA)	CompTIA Linux+ Powered by LPI	
E4	Computing Technology Industry Association (CompTIA)	CompTIA Network+ ce	
E4	Computing Technology Industry Association (CompTIA)	CompTIA Security+ ce	
E5	Computing Technology Industry Association (CompTIA)	CompTIA Server+	
E3	Electronics Technicians Association, International (ETA-I)	Apprentice (APP)	
E4	Electronics Technicians Association, International (ETA-I)	Fiber Optics Installer (FOI)	
E5	Electronics Technicians Association, International (ETA-I)	Fiber Optics Technician (FOT)	
E3	Electronics Technicians Association, International (ETA-I)	General Communications Technician - Level 1 (GCT1)	
E6	Global Information Assurance Certification (GIAC)	GIAC Certified Incident Handler (GCIH)	
E7	Global Information Assurance Certification (GIAC)	GIAC Certified Intrusion Analyst (GCIA)	
E7	Global Information Assurance Certification (GIAC)	GIAC Global Industrial Cyber Security Professional (GICSP)	
E7	Global Information Assurance Certification (GIAC)	GIAC Information Security Fundamentals (GISF)	
E5	Global Information Assurance Certification (GIAC)	GIAC Security Essentials Certification (GSEC)	
E7	Global Information Assurance Certification (GIAC)	GIAC Security Expert (GSE)	
E6	Global Information Assurance Certification (GIAC)	GIAC Security Leadership Certification (GSLC)	
E6	Information Systems Audit and Control Association (ISACA)	Certified Information Security Manager (CISM)	
E6	Information Systems Audit and Control Association (ISACA)	Certified Information Systems Auditor (CISA)	
E5	International Association of Privacy Professionals (IAPP)	Certified Information Privacy Technologist (CIPT)	
E5	International Information Systems Security Certification Consortium, Inc. ((ISC)2)	Associate of ISC2	
E7	International Information Systems Security Certification Consortium, Inc. ((ISC)2)	Certified Information Systems Security Professional (CISSP)	
E5	International Information Systems Security Certification Consortium, Inc. ((ISC)2)	Systems Security Certified Practitioner (SSCP)	
E4	Microsoft Corporation	Microsoft Certified IT Professional (MCITP)	
E3	Microsoft Corporation	Microsoft Certified Professional (MCP)	
E5	Microsoft Corporation	Microsoft Certified Solutions Associate (MCSA): Windows 8	
E5	Microsoft Corporation	Microsoft Certified Solutions Associate (MCSA): Windows Server 2008	
E5	Microsoft Corporation	Microsoft Certified Solutions Associate (MCSA): Windows Server 2012	
E6	Microsoft Corporation	Microsoft Certified Solutions Expert (MCSE): Server Infrastructure	
E4	Microsoft Corporation	Microsoft Certified Technology Specialist (MCTS)	
E5	Microsoft Corporation	Microsoft Certified Trainer (MCT)/Learning Consultant (MCLC)	
E5	Microsoft Corporation	Microsoft Technology Associate (MTA)	
E6	Oracle Corporation	Oracle Certified Professional, Oracle Solaris 10 System Administrator	
E4	Transportation Security Administration	Transportation Worker Identification Credential (TWIC)	

Visit Navy COOL at https://www.cool.navy.mil/usn/ for additional Credentials that you may qualify to earn; however funding may be limited to your GI Bill.

UNITED SERVICES MILITARY APPRENTICESHIP PROGRAM (USMAP):

Rank	Apprenticeship	Date Completed
E1 - E9	Computer Operator	
E1 - E9	Computer Programmer (Professional & Kindred)	
E1 - E9	Electronics Mechanic	
E1 - E9	Electronics Mechanic (Any Industry)	
E1 - E9	Electronics Tester	
E1 - E9	Internetworking Technician	
E1 - E9	Radio Station Operator (Aircraft Mfg)	

Visit USMAP https://usmap.netc.navy.mil/usmapss/static/index.htm for additional information.

STAY NAVY

REENLIST / EXTEND: Request Chit/Form: _____ Guaranteed Assignment in Detailing (GUARD 2000): _____

Career Management System/Interactive Detailing (CMS/ID): _____ Medical/Dental Screening: _____

Command Recommendation (evaluation): _____ Bonus: _____ Ceremony: _____

TRANSFER:

15 Months	12 Months	9 Months	6 Months	Orders Received
Exception Family Member_____	EFM____	CMS/ID____	Accept Orders_____	Screening_____
CMS/ID_____	CMS/ID_____		Reverse Sponsor_____	Obligate_____
Continuous Overseas Tours (COT) _____			Relocation (FFSC) ____	Bonus_____
Overseas Tour Extension Incentive Program (OTEIP) _____			Medical/Dental_____	

For additional assistance in transfer and relocation, go to the Military HOMEFRONT website: http://www.public.navy.mil/bupers-npc/Pages/default.aspx and visit your Fleet and Family Support Center on base.

SEPARATING/RETIRE:

18 -12 months	6 months	90 days	30 days
Transition GPS _____	MED/DEN _____	Copy of Records_____	Copy of Records _____
Complete DD2648PSD_____	Relocation _____	Official Record CD_____	PSD_____
Transition Planning_____	Relocation Services (FFSC) _____	Arrange Ceremony_____	MED/DEN _____
	Reserve Affiliation_____	Request Leave / PTDY _____	
	VA/DVA_____		

PHYSICAL FITNESS:

Participate in a year-round physical fitness program to meet Navy fitness and BCA standards. Review and verify accuracy of PFA data in PRIMS within 60 days of the PFA cycle. (PRIMS is accessible through your BUPERS Online Account)

Height_____ Weight_____ If Required (Neck_____ Waist_____ Hips (Female) _____ BCA _____)

Last 2 PRT Cycles: Curl-ups_____/_____ Push-ups_____/_____ Run/Swim/Cardio_____/____ Overall Score_____/_____

List date (if) any PRT/BCA failure(s) over the last 5 years _____/_____ List if any Medical Waiver(s)_____/_____

For more information on Navy Fitness, visit: http://www.navyfitness.org/

CPO REQUIRED NAVY PME:

Course Title	Course Location	CIN/CSE ID	Course Length	Date Completed
ADAMS for Supervisors	Various Locations	S-501-0120	8 hours	
ADAMS for Facilitators	Various Locations	S-501-0110	16 hours	
Ethics Training	Command Delivered			
Required General Military Training Topics For FY 2016 (Standardized Core Training) [1]				
Antiterrorism Level I Awareness	NKO/Command Delivered	CENSECFOR-AT-010-1.0		
Combating Trafficking in Persons General Awareness	NKO/Command Delivered	DOD-CTIP-1.0		
Counterintelligence Awareness and Reporting	NKO/Command Delivered	DOD-CIAR-1.0		
Cyber Awareness Challenge V3	NKO/Command Delivered	DOD-IAA-V13.0		
Operations Security (Uncle Sam's OPSEC)	NKO/Command Delivered	NIOC-USOPSEC-2.0		
Privacy and Personally Identifiable Information	NKO/Command Delivered	DOD-PII-2.0		
Records Management	NKO/Command Delivered	DOR-RM-010-1.1		
Sexual Assault Prevention and Response Awareness (SAPR)	Command Delivered	CPPD-GMT-SAPRA-1.0 CC		
Equal Opportunity/Sexual Harassment/Grievance Procedures [2]	Command Delivered	CPPD-GMT-EOSH-1.0		
Suicide Prevention	Command Delivered	CPPD-GMT-SAP-1.0		
Required General Military Training Topics For FY 2016 (Command-Assigned Readiness –Enhancement topics; biennial periodicity) [3]				
Alcohol, Drug, and Tobacco Awareness	Command Delivered	CPPD-GMT-ADTA-1.0		
Domestic Violence Prevention and Reporting	NKO/Command Delivered	CPPD-GMT-DV-1.0		
Sexual Health and Responsibility	NKO/Command Delivered	CPPD-GMT-SHR-1.0		
Stress Management	Command Delivered	CPPD-GMT-SM-1.0		

1 - Verify GMT topics on NKO GMT web page.
2 - Course should be delivered in conjunction with SAPR. If not practicable, separate training is still required.
3 - Topics to be delivered once per deployment cycle. If deployment cycle is not applicable or exceeds two years between deployments, then deliver once every two years.

CPO REQUIRED COMMUNITY PME:

Course Title	Course Location	CIN/CSE ID	Course Length	Date Completed
Electronic Key Management System	NKO/PQS Page	NAVEDTRA 43462-1B	Self-paced	

CPO RECOMMENDED NAVY PME:

Course Title	Course Location	CIN/CSE ID	Course Length	Date Completed
Chief's Mess Training (CMT/LCC) (21 modules available)	Command Delivered		Each Month	
Primary Enlisted Professional Military Education (PEPME)	NKO	Military DON/ PME	60 hours	
Block 1 Primary EPME - Introduction	NKO	PPME-SENL-B1		
Block 2 Primary EPME - The Culture of the Navy	NKO	PPME-SENL-B2		
Block 3 Primary EPME - Governance of the Navy	NKO	PPME-SENL-B3		
Block 4 Primary EPME - How the Navy Thinks About War	NKO	PPME-SENL-B4		
Block 5 Primary EPME - How the Navy Plans its Operations	NKO	PPME-SENL-B5		
Block 6 Primary EPME - Technology in the Maritime Domain	NKO	PPME-SENL-B6		
Block 7 Primary EPME - PME Conclusion	NKO	PPME-SENL-B7		
Joint Professional Military Education (JPME)	War College	Military DON/ PME	40 hours	
Senior Enlisted Academy	Newport RI	P-920-1300	9 weeks (DL) / 3 weeks (F2F)	
Senior Enlisted Leadership Development Guide	NKO			
Culture	NKO or College Course	Foreign Language and Culture	45 hours	
Recommended General Military Training Topics For FY 2016 (Delivery determined by command discretion) [1]				
Energy Policy	Command Delivered	OPNAV-GMTE-1.0		
Hazing Policy and Prevention	Command Delivered	CPPD-GMT-HPP-1.0		
Operational Risk Management	NKO/Command Delivered	CPPD-GMT-ORM-1.0		
Personal Financial Management	Command Delivered	CPPD-GMT-PFM16-1.0		
Physical Readiness	NKO/Command Delivered	CPPD-GMT-PRT-2.0		

1 - Verify GMT topics on NKO GMT web page.

Courses with Recommended Reserve Points:
Commander Navy Reserve Forces (CNRF) N7 determines the number of reserve points awarded for completion of a course taken on Navy E-Learning. This listing should only be used as a guide and is subject to change by direction of CNFR N7.
Navy E-Learning has no control over how many, if any, reserve points are eventually awarded for the completion of a course. All questions concerning the award of reserve points should be directed to CNFR N7.

CPO RECOMMENDED RESERVE PME:

Course Title	Course Location	CIN/CSE ID	Course Length	Date Completed
NROWS Orders Administration Course	NKO	R-500-0140/02PG /DoN	8 hours	
Naval Reserve Center Commanding Officer Officer In Charge	NKO	CNRFC-COOIC-1.0 /DoN	8 hours	
Guidance for Mobilization	NKO	CNRFC-GMB-1.1 /DoN	4 hours	
Military Sealift Command 101	NKO	CNRFC-MSC101 /DoN 1.1	24 hours	
Non-Prior Service Accession Program	NKO	CNRFC-NPSAP-2 /DoN 0	23 hours	

CPO RECOMMENDED COMMUNITY PME:

Course Title	Course Location	CIN/CSE ID	Course Length	Date Completed
Information Assurance (IA)	NKO/PQS Page	NAVEDTRA 43466		

NAVY PROFESSIONAL READING PROGRAM (PRP)

The purpose of the Reading Program is to facilitate the professional and personal development of all Sailors. For additional information on changes, refer to NAVADMIN 309/12 or visit http://navyreading.dodlive.mil/ or http://navy.lib.overdrive.com/ or https://wwwa.nko.navy.mil

ESSENTIAL READING

WARFIGHTING FIRST	**Completed**
1812: The Navy's War *by George C. Daughan*	
Cybersecurity and Cyberwar: What Everyone Needs to Know *by P.W. Singer*	
SEAL of Honor *by Gary Williams*	
Leading with the Heart *by Mike Krzyzewski, Donald T. Phillips, and Grant Hill*	
The Twilight War *by David Crist*	
Wake of the Wahoo *by Forest J. Sterling*	
OPERATE FORWARD	**Completed**
The Crisis of Islam *by Bernard Lewis*	
Execute Against Japan *by LT Joel Holwitt, USN*	
Monsoon *by Robert Kaplan*	
Neptune's Inferno *by James D. Hornfischer*	
Red Star Over the Pacific *by Toshi Yoshihara and James Holmes*	
Fallout *by Catherine Collins and Douglas Frantz*	
BE READY	**Completed**
A Sailor's History of the U.S. Navy *by Thomas Cutler*	
In the Shadow of Greatness *by Joshua Welle, John Ennis, Katherine Kranz and Graham Plaster*	
Navigating the Seven Seas *by Melvin G. Williams, Sr. and Melvin G. Williams, Jr.*	
The Trident: The Forging and Reforging of a Navy SEAL Leader *by Jason Redman and John Bruning*	
Turn the Ship Around *by David Marquet*	
Wired for War *by P.W. Singer*	

Twenty-four additional books are categorized as "recommended reading," and are available as electronic books (e-books). Many can be downloaded at no cost through the Navy general library program site on Navy Knowledge On-line (NKO).

The entire list, with book summaries and additional information is available at http://navyreading.dodlive.mil/

The CNO-PRP has been streamlined to make our Navy's reading program more interactive, affordable, and wherever possible, electronically accessible. To that end: a number of the titles will be available for free at the NKO portal at https://wwwa.nko.navy.mil.

- Click on the reference tab, then e-library audio and e-books tab.
- In order to download books, an "overdrive" account is required. On the top right, click on the overdrive window and follow the prompts.
- Then, not only are the PRP books available, but also hundreds of other items.

Note: Security restrictions preclude downloading via Navy owned computers, so downloading them to personally-owned devices will be required.

CPO RECOMMENDED COMMUNITY READING

Title	**Completed**
ACP 110; NKO/CID/IT page *by Allied Communication Publication*	
ACP 100, NATO SUPP-1 AIGs Instructions and Assignments ; NKO/CID/IT page *by Allied Communication Publication*	
ACP 120(Jun01), Common Security Protocol; NKO/CID/IT page *by Allied Communication Publication*	
ACP 121(H), Communication Instructions - General; NKO/CID/IT page *by Allied Communication Publication*	
ACP 122, Information Assurance for Allied Communications and Information Systems; NKO/CID/IT page *by Allied Communication Publication*	
ACP 123(A), Common Messaging Strategy & Procedure; NKO/CID/IT page *by Allied Communication Publication*	
ACP 124(D), Communication Instruction Radio Telegraph Procedure; NKO/CID/IT Page *by Allied Communication Publication*	
Communication Instructions Radiotelephone Procedures; NKO/CID/IT Page *ACP 125(F)*	
ACP 126(C), Communication Instruction Teletypewriter Procedure; NKO/CID/IT page *by Allied Communication*	

Title	Completed
Publication	
ACP 128(A), Allied Telecommunication Record System Operating Procedure; NKO/CID/IT page *by Allied Communication Publication*	
ACP 131, Communication Instructions Operating Signals; NKO/CID/IT page *by Allied Communication Publication*	
ACP 135, Communication Instructions Distress and Rescue Procedures; NKO/CID/IT page *by Allied Communication Publication*	
ACP 142, P_MUL - A Protocol for Reliable MULTICAST Messaging in Bandwidth Constrained and Delayed Acknowledgment(EMCOM) Environments; NKO/CID/IT page *by Allied Communication Publication*	
ACP 160, IFF/SIF Operational Procedures; NKO/CID/IT page *by Allied Communication Publication*	
ACP 167, Glossary of communications Electronics Terms; NKO/CID/IT page *by Allied Communication Publication*	
ACP 190 SUPP-1, Guide to Electromagnetic Spectrum Management in Military Operations; NKO/CID/IT page *by Allied Communication Publication*	
ACP 191, Ionospheric Sounder Operations; NKO/CID/IT page *by Allied Communication Publication*	
ACP 193, Ground Routing Protocol for use with Automatic Link Establishment (ALR) Capable HF Radios; NKO/CID/IT page *by Allied Communication Publication*	
ACP 220(Jun03), Multination Video Conferencing Services Automatic Digital Network (AUTODIN) Operating Procedures; NKO/CID/IT page *by Allied Communication Publication*	
Automatic Digital Network (AUTODIN) Operating Procedures *NKO/CID/IT Page*	
C4I IT21 Manager *NKO/CID/IT page*	
CMS-6 *NKO/CID/IT page*	
Communication Security Instruction 2000.2, Military Sealift Command Communication Policy and Procedures Manual *NKO/CID/IT page*	
Department of Navy Directive 8500.1 Information Assurance	
Department of Defense Instruction 8500.2 *NKO/CID/IT page*	
Department of Defense Instruction 8510.1 *NKO/CID/IT page*	
Department of Defense Instruction 8510.BB *NKO/CID/IT page*	
Electronic Key Management System (EKMS)	
EE130-AG-HBK-020, Extremely High Frequency (EHF) Low Data Rate (LDR) and Medium Data Rate (MDR) System User's Handbook *NKO/CID/IT Page*	
Federal Information Processing Standard FIPS 83, Guidelines on users Authentication Techniques for Computer Network Access Control *NKO/CID/IT Page*	
Federal Information Processing Standard (FIPS) 48, Guideline: On Evaluation of Techniques for Automated Personal Identifications *NKO/CID/IT Page*	
Federal Information Processing Standard(FIPS) 11-3,Guideline:American National Dictionary for Information Processing Systems *NKO/CID/IT Page*	
INMARSAT B High Speed Data Satellite Communication System EE 130-JW-SOM-010 *NKO/CID/IT Page*	
Joint Army-Navy-Air Force Publication, JANAP 128(J), Automatic Digital Network (AUTODIN) Operating Procedures; NKO/CID/IT Page	
National Security Agency NAG 16 (F) *NKO/CID/IT page*	
Naval Tactics Techniques Procedure 6-02, C4I Infrastructure; NKO/CID/IT Page	
Naval Telecommunications Procedures, NTP 2 Section 1 (E), Navy Super High Frequency Satellite Communications; NKO/CID/IT Page	
Naval Telecommunications Procedures, NTP 2 Section 2 (E), Navy Ultra High Frequency Satellite Communications; NKO/CID/IT Page	
Naval Telecommunications Procedures, NTP 2 Section 3 (B), Navy Extremely High Frequency Satellite Communications; NKO/CID/IT Page	
Naval Telecommunications Procedures, NTP 2 Section 4 (A), Navy Commercial Satellite Communication; NKO/CID/IT page	
Naval Telecommunications Procedures, NTP 2 Section 5 (Oct01), Navy Satellite Communications (SATCOM) Broadcast Services; NKO/CID/IT page	
Naval Telecommunications Procedures, NTP 3(K), Telecommunications Users Manual Operating Procedures; NKO/CID/IT page	
Fleet Communications; NKO/CID/IT Page *NTP 4 (E)*	

Title	Completed
Naval Telecommunications Procedures, NTP 21, Defense Message System User's Manual; NKO/CID/IT Page	
Naval Telecommunications Procedures, NTP 22 Defense Message System Local Operations And Network Management Policies and Procedures; NKO/CID/IT Page	
Naval Warfare Publication 1-03.1 Operational Reports; NKO/CID/IT page	
Naval Warfare Publication 5-01 Naval Operational Planning; NKO/CID/IT Page	
Operational Naval Instruction 3100.6 *NKO/CID/IT page*	
Navy/Marine Implementation of National Policy on Control of Compromising Emanation *OPNAVINST C5510.93F*	
Department of the Navy Security Classification Guides *OPNAVINST 5513.1*	
Navy Information Assurance Program *OPNAVINST 5239.1*	
Department of the Navy Personnel Security Program *SECNAV M-5510.30 Series*	
Department of the Navy Information Security Program *SECNAV M-5510.36*	
Department of the Navy Policy for Publicly Accessible World Wide Sites *SECNAV M-5720.47A*	

Information Systems Technician
Senior Chief Petty Officer
(Master)

NAME_____

SKILL TRAINING

(Schools, courses and assignments directly related to occupation)

REQUIRED SKILL TRAINING

Course Title	Course Location	CIN/CSE ID	Course Length	Date Completed
See initial skills training from E1-E7 section				

RECOMMENDED SKILL TRAINING

Course Title	Course Location	CIN/CSE/ACE ID	Course Length	Date Completed
Senior Enlisted Academy (SEA)	Newport, RI	P-920-1300	3 weeks 70 hours of PPME on NKO and 3 weeks resident	
Project Management Professional (PMP)	Project Management Institute			
Professional in Human Resources (PHR)	Human Resource Certification Institute			
Six Sigma Black Belt (CSSBB)	ASQ			
Automated Digital Network System (ADNS) Family of Systems variants F and/or H	Various	A-101-1122 / A-101-1125	12 days	
Digital Wideband Transmission System (DWTS) Operator	Norfolk, VA / San Diego, CA	A-260-0360	4 days	
Digital Modular Radio(DMR)	Norfolk, VA / San Diego CA	A-260-1955	4 days	
High Frequency Radio Group (HFRG)	San Diego, CA	A-260-0051	10 days	
Electronic Key Management System Manager	Naples, IT Dam Neck, VA Mayport, FL Groton CT, Kings Bay, GA San Diego, CA Pearl Harbor, HI Kings Bay, GA Yokosuka, Japan Bangor, WA	V-4C-0013	23 days	
Secret Compartmental Information (SCI) Network System Administrator	San Diego CA	W-3B-1112	5 days	
Secret Compartmental Information (SCI) Network Operator	Norfolk, VA/ San Diego CA,	W-3B-1111	12 days	
Commercial Broadband Satellite Program (CBSP) Unit Level/ Force Level or Small Ship variant operator.	Norfolk, VA / San Diego, CA	A-260-0163 / A-260-0165	12 days	
Information and Communication Manager (ICMC)	Norfolk VA, San Diego CA	A-202-0041	19 days	

NAVY ENLISTED CLASSIFICATION CODE (NEC) OPPORTUNITIES

Course Title	Course Location	CIN/CSE/ACE ID	Course Length	Date Completed
2710, 2765, 2766 - Global Command Control System Maritime (GCCS-M) System Administrator for 4.X/ 4.0.3/ 4.1 Family of Systems	Dam Neck, VA / San Diego, CA	A-150-0045 / A-150-3400 / A-150-3500	26 days	
2791 - System Administrator	Virginia Beach, VA / Groton, CT / Pensacola, FL / San Diego, CA	A-150-1980	18 weeks 90 Instructional Days	
2780 - Network Security Vulnerability Technician (NSVT)	Dam Neck, VAGroton, CTSan Diego, CAKings Bay, GAYokosuka, JapanBangor, WAPearl Harbor, HI	A-531-0022	8 weeks 40 Instructional Days	
2301 - Enlisted Frequency Manager	Keesler AFB, MS	A-202-0039	96 days	
2302 - Joint Task Force Spectrum	Keesler AFB, MS	A-202-0008	16 days	
2781 - Advanced Network Analyst	Various	A-531-0045	11 weeks 54 Instructional Days	
2379 - Journeyman Communication Course	Pensacola, FL San Diego, CA Norfolk, VA	A-260-0061	96 days	
2779 - Information Systems Security Manager (ISSM)	Groton CT, Bangor, WA Kings Bay GA, Dam Neck, VA Yokosuka, Japan San Diego CAPearl Harbor, HI	A531-0009	2 weeks 10 Instructional Days	
9613 - Special Operation Radio Operator	Fort Bragg, NC	S-101-0001	159 days	
9502 - Navy Instructor Training Course (NITC)	Various Locations	A-012-0077	19 days	

JOB DESCRIPTION

The IT Technician is comprised of personnel who perform core and specialty functions of Network Administration, Communications Operations and Message Processing.

In the area of **Network Administration**, IT Technicians provide technical assistance to computer system users. They answer questions and/or resolve computer problems for clients. IT Technicians provide assistance concerning the use of computer hardware and software, including printing, installation, word-processing, electronic mail, and operating systems. They conduct help desk functions and repair fiber optics and a variety of cables. Additionally, IT Technicians conduct day-to-day operations such as system backups and restores, and add, modify, or delete user accounts. They install operating systems, applications and peripherals, troubleshoot user problems, debug command language scripts, and assist the Information Systems Security Officer (ISSO) in access control security (i.e., passwords, access and control lists, etc).

They may also perform advanced Network operations, administration, maintenance and training. IT Technicians analyze, design, test, and evaluate network systems, Internet, Intranet, and other data communications systems. They perform network modeling, analysis, and planning. They research and recommend network and data communications hardware and software solutions. IT Technicians may also perform Network Enterprise Architecture | Cyber Security. They defend Navy networks from cyber threats utilizing hardware/software defense in depth methodology to prevent cyber-attacks.

In the area of **Communications Operations**, IT Technicians establish, monitor, and maintain radio frequency (RF) communications systems both ashore and afloat. Specifically, they plan, coordinate establishment, monitor, troubleshoot, and restore classified and unclassified RF communication systems that support exchange of voice, data, video and imagery using terrestrial or satellite VLF, LF, MF, HF, VHF, UHF, SHF and EHF frequency spectrums afloat and ashore. Additionally, specialists in this area may perform spectrum management - coordinate and generate frequency assignments for use within an area of responsibility, assess the impact of new frequency requirements upon the existing radio frequency environment, maintain a history of interference incidents and frequency employment files, initiate action as appropriate to prevent and/or correct harmful interference, and resolve joint and space interference.

In the area of **Message Processing**, IT Technicians provide message handling, storage, and retrieval of incoming and outgoing messages afloat and ashore. They maintain connectivity between shipboard LAN and message delivery systems ashore. They administer user profiles, and maintain directory information trees. IT Technicians operate the Message Systems, NAVMACS, and other automated message processing systems.

RECOMMENDED BILLET ASSIGNMENTS

The Information System Technician of the 21st century operate and maintain the Navy's global satellite telecommunications systems, local and wide area networks, and micro-computer systems used in the fleet. Advanced global C4I support is provided it units ashore and sea.

PRIORITY ASSIGNMENT: Sea (large deck platform) Afloat Staff, Special Warfare, Navy Expeditionary Warfare

BILLET ASSIGNMENT SEA: Department LCPO, IAM, EKMS Manager, Spectrum Management, EKMS Inspector

SUBSEQUENT ASSIGNMENT: In CONUS Shore Tour (Communications Station, Tactical Support Center, NIOC, Afloat Training Group, Center for Information Dominance)

BILLET ASSIGNMENT ASHORE: Department LCPO, EKMS Manager, EKMS Inspector, Spectrum Management

ALTERNATE ASSIGNMENT: Overseas Shore (Communications Station, NIOC, STAFF, JOINT, Special Warfare), Navy Expeditionary Warfare

BILLET ASSIGNMENT ASHORE: Department LCPO, EKMS Manager, Spectrum Management Other Opportunities: Joint Assignments Special Programs (GSA) Global Support Assignments

PERSONAL AND PROFESSIONAL DEVELOPMENT (Completed at reporting 30 day Career Development Board)

Command Address: _____ QD Phone Number: _____

_____

Division Officer: _____ Phone Number: _____

Command Master Chief: _____ Phone Number: _____

Leading Chief Petty Officer: _____ Phone Number: _____

Sponsor/Mentor: _____ Phone Number: _____

Depart/Division Career Counselor: _____ Phone Number: _____

ADSD: _____ REPORT DATE: _____ EAOS: _____ PRD: _____ SEA / SHORE: _____/____
PAYGRADE E8 (3 Years time in service required to be eligible for advancement to E-9)

Date Advanced: _____ Eligible Advancement Date: _____ Number of times up: _____ HYT Date: _____

Security Clearance Level: _____ Date Last updated: _____ Command INDOC complete: _____

CAREER DEVELOPMENT BOARDS: Use OPNAVINST 1040.11(ser) & Career Counselor Handbook NAVPERS 15878
(E8) Reason for Convening/Discussion Items: (Upon completion update (CIMS) Career Information Management System)

Reporting (within 30 days for active duty or three drill weekends for SELRES) (Date Conducted): _____

6 Month: _____ 12 Month: _____ 24 Month: _____36 Month: _____48 Month: _____

60 Month: _____ CPO 365: _____ Special Program: _____ Member Request: _____

HYT 24 months (Date): _____ HYT 12 months (Date): _____ HYT Waiver Date: _____Approve/Disapprove

CMS/ID 13 months to PRD: _____ Transfer: _____

Early Separation: _____ Fleet Reserve Retirement Options:_____

Physical Fitness Test Failure: _____ Career Status Bonus (election message received): _____

Advancement Center: Visit NKO Navy Advancement page located under the Career Management Tab
(Items to collect/discuss: Bibliography for Advancement, Enlisted Advancement Exam Strategy Guide, Profile Sheets)

Non-Select: _____

Enlisted to Officer Commissioning Program Application & Administration Manual OPNAVINST 1420.1(series):

Commissioning Programs Applications: _____ (prior to submission, command endorsement):_____

Medical Enlisted Commissioning Program (MECP) _____ Medical Service Corps In-service Procurement _____

Officer Candidate School _____ Limited Duty Officer _____ Chief Warrant Officer _____

Navy Leader Planning Guide: Log on to NKO and select the Leadership Tab to access this guide.

SELECTION BOARD CHECKLIST FOR SCPO PROMOTION TO MCPO

Step 1 - Review your Official Record to see what documentation, qualifications, etc. may be missing or requiring an update. This should be accomplished every six months after promotion to Second Class. However, it is imperative that this is accomplished six months prior to a selection board. Check the following three major sections to verify your Official Record:

a. **BUPERS Online**: BUPERS Online (https://www.bol.navy.mil) is your main tool to ensure your record is up to date and helps you to be proactive in making the most of your promotion opportunity. You should review your:
   1. **Official Military Personnel File (OMPF)**: All active duty and reserve personnel having a BOL account, a CAC (with appropriate certificates) and a CAC-enabled computer can now view their OMPF online by selecting the OMPF option on the BOL main menu page. This is the preferred method of obtaining OMPF information to eliminate the unnecessary time-lags caused by waiting days or weeks to receive a requested CD ROM.
   2. **If Deployed:** Click on "*Request Record on CD*" to order your Official Military Personnel File (OMPF). This must be accomplished four to six months before a board convenes, which will allow time for delivery and updating of your record if required.
   3. Check your **Performance Summary Record (PSR)** and **Enlisted Summary Record (ESR)** on https://www.bol.navy.mil, click on the "*ODC, OSR, PSR, ESR*" link.
b. **Electronic Service Record (ESR)** Self-Service ESR: This can be viewed at (https://nsips.nmci.navy.mil) or on the Navy Standard Integrated Personnel System (NSIPS) ESR server onboard ship.
c. **Electronic Training Jacket (ETJ)**: Log-on to Navy Knowledge Online (NKO) and review your entire ETJ making sure that each section is correct. If not, clicking on "*Data Problems*" at the bottom of each page which will guide you on how to make corrections or updates.
d. **US Navy Awards website**: Log onto (https://awards.navy.mil/) to review any awards you may qualify for but were unaware of.

Step 2 - Submit appropriate missing documents to the selection board.

a. Selection board packages provide candidates the opportunity to submit any documents missing from the sections of their records which are viewed by the selection boards. MILPERSMAN 1070-080 specifies which documents from the enlisted permanent personnel record are provided to the selection board for review. Any documents the member has verified as missing from those sections of their permanent personnel record may be submitted as a selection board package.
b. For submissions directly to the board and for those circumstances where the eligible candidate cannot get their official record updated and confirmed prior to the selection board convening date:
   1. All correspondence should be on plain white paper for readability; paper clipped (no staples, binders, folders, or tabs) and submitted under cover letter to the president of the board. Candidates must verify the correct subject line and board number (see below) is on their cover letters to ensure their packages appear before the proper board.
   2. Correspondence must include your Full name and SSN, must be affixed and legible on all documents submitted, and must be postmarked not later than that date listed in the associated NAVADMIN and addressed to:

      NAVY PERSONNEL COMMAND CUSTOMER SERVICE CENTER
      PRESIDENT
      FY-**XX ACTIVE/RESERVE** E9 ENLISTED SELECTION BOARD **#XXX**
      5640 TICONDEROGA LOOP BLDG 768 RM E302
      MILLINGTON TN 38055
      (Active = 210 / SELRES = 205 / FTS = 206)

      (Use of special handling mail (certified or registered) is not advised due to significant delays in handling.)

c. Ensure official record reflects any individual augmentation mission. (awards, evals, NEC, etc).
d. Check http://www.npc.navy.mil/Boards/ActiveDutyEnlisted/GeneralInformation.htm to verify that the selection board has received your correspondence (if sent).

NOTE: It is highly recommended that if corrections or updates are made, review your OMPF, or if Deployed, re-order your CD-Rom to confirm changes. (NOTE: Please allow 60 days for changes to take effect)

Step 3 - After reviewing your service record - such as evaluations, awards, qualifications, etc. - start reviewing what you can do to improve yourself, such as:

a. Request a **Career Development Board (CDB)** through your chain of command.
b. Take a good, hard look at the type of **Collateral Duties** you are assigned. Review your command collateral duties instruction and talk with your COC and / or appear before the CDB. Take the tough command duties that provide the most involvement in the command as a whole and that have direct sailor support.
c. Review your current level of education to see how far along you are in earning a **college degree** and pursue **non-resident Navy courses** to expand your level of knowledge. Complete the **Navy e-Learning courses** on **NKO** that are recommended in this document.
d. Check out **OTHER Learning Opportunities** to add to your service record, such as the CANTRAC Volume I (Training Facilities) and CANTRAC Volume II (Course Descriptions). NKO at Learning > Learning Opportunities

Step 4 - Review qualifications that your rating values or requires for advancement and create a plan to earn these important pieces in the professional growth and advancement puzzle. Read the applicable NAVADMIN for additional dates and information, and review previous selection board precepts.

QUALIFICATIONS AND CERTIFICATIONS

Sea/Shore General Qualifications **Watch Standing Qualifications**	**Report Date**	**Completion Date** **(If qualification is not required place N/A in this Block)**
Ship Board Fire Fighting		
Aviation Fire Fighting		
Basic Damage Control		
Advanced Damage Control		
3M 303 Work Center Supervisor		
3M 304 LCPO/Division Officer		
Section Leader		
Officer of the Deck (OOD) (In Port)		
Command Duty Officer (CDO)		
Junior Officer of the Deck (JOOD)		
Officer of the Deck (OOD) (At Sea)		
Personal Qualifications Standard		

Mandatory warfare qualification for enlisted Sailors assigned to designated warfare qualifying commands:

Warfare qualification programs	**Report Date**	**Completion Date** **(If qualification is not required place N/A in this Block)**
Aviation Warfare Specialist		
Expeditionary Warfare Specialist		
Fleet Marine Forces		
Information Dominance Warfare Specialist		
SEABEE Combat Warfare		
Surface Warfare Specialist		

Rate Specific/Department Qualifications (Add)	**Report Date**	**Completion Date** **(If qualification is not required place N/A in this Block)**

CERTIFICATIONS

The following post military occupations are similar to the IT-Information Systems Technician Rating. For more information about these occupations, visit NAVY COOL at https://www.cool.navy.mil/usn/.

Occupation (Civilian Employer)
Broadcast Technicians
Computer and Information Systems Managers
Computer Network Architects
Computer Network Support Specialists
Computer Operators
Computer Programmers
Computer Systems Analysts
Computer User Support Specialists
Computer, Automated Teller, and Office Machine Repairers
Database Administrators
Electronics Engineering Technicians
Information Security Analysts
Information Technology Project Managers
Inspectors, Testers, Sorters, Samplers, and Weighers
Network and Computer Systems Administrators
Radio Operators
Radio, Cellular, and Tower Equipment Installers and Repairers
Telecommunications Engineering Specialists
Telecommunications Equipment Installers and Repairers, Except Line Installers

Occupation (Federal Employer)
0132 - Intelligence Series
0335 - Computer Clerk and Assistant Series
0394 - Communications Clerical Series
2210 - Information Technology Management Series
2608 - Electronic Digital Computer Mechanic
9944 - Electronics Technician

Navy COOL: The following certifications and licenses are applicable to the IT-Information Systems Technician rating. *They may require additional education, training or experience.*

Target paygrade	Certifying Agency	Credential Title	Date Completed
E5	American Board for Certification in Homeland Security (ABCHS)	Certified in Homeland Security Level V (CHS-V)	
E4	AXELOS	ITIL Foundation Level	
E5	Cisco Systems, Inc.	Cisco Certified Design Associate (CCDA)	
E6	Cisco Systems, Inc.	Cisco Certified Design Professional (CCDP)	
E4	Cisco Systems, Inc.	Cisco Certified Entry Networking Technician (CCENT)	
E5	Cisco Systems, Inc.	Cisco Certified Network Associate (CCNA) Routing and Switching	
E4	Cisco Systems, Inc.	Cisco Certified Network Associate (CCNA) Security	
E6	Cisco Systems, Inc.	Cisco Certified Network Professional (CCNP) Routing and Switching	
E5	Cisco Systems, Inc.	Cisco Cybersecurity Specialist	
E3	Computing Technology Industry Association (CompTIA)	CompTIA A+ ce	
E7	Computing Technology Industry Association (CompTIA)	CompTIA Advanced Security Practitioner (CASP) ce	
E4	Computing Technology Industry Association (CompTIA)	CompTIA Linux+ Powered by LPI	
E4	Computing Technology Industry Association (CompTIA)	CompTIA Network+ ce	
E4	Computing Technology Industry Association (CompTIA)	CompTIA Security+ ce	
E5	Computing Technology Industry Association (CompTIA)	CompTIA Server+	
E3	Electronics Technicians Association, International (ETA-I)	Apprentice (APP)	
E4	Electronics Technicians Association, International (ETA-I)	Fiber Optics Installer (FOI)	
E5	Electronics Technicians Association, International (ETA-I)	Fiber Optics Technician (FOT)	
E3	Electronics Technicians Association, International (ETA-I)	General Communications Technician - Level 1 (GCT1)	
E6	Global Information Assurance Certification (GIAC)	GIAC Certified Incident Handler (GCIH)	
E7	Global Information Assurance Certification (GIAC)	GIAC Certified Intrusion Analyst (GCIA)	
E7	Global Information Assurance Certification (GIAC)	GIAC Global Industrial Cyber Security Professional (GICSP)	
E7	Global Information Assurance Certification (GIAC)	GIAC Information Security Fundamentals (GISF)	
E5	Global Information Assurance Certification (GIAC)	GIAC Security Essentials Certification (GSEC)	
E7	Global Information Assurance Certification (GIAC)	GIAC Security Expert (GSE)	
E6	Global Information Assurance Certification (GIAC)	GIAC Security Leadership Certification (GSLC)	
E6	Information Systems Audit and Control Association (ISACA)	Certified Information Security Manager (CISM)	
E6	Information Systems Audit and Control Association (ISACA)	Certified Information Systems Auditor (CISA)	
E5	International Association of Privacy Professionals (IAPP)	Certified Information Privacy Technologist (CIPT)	
E5	International Information Systems Security Certification Consortium, Inc. ((ISC)2)	Associate of ISC2	
E7	International Information Systems Security Certification Consortium, Inc. ((ISC)2)	Certified Information Systems Security Professional (CISSP)	
E5	International Information Systems Security Certification Consortium, Inc. ((ISC)2)	Systems Security Certified Practitioner (SSCP)	
E4	Microsoft Corporation	Microsoft Certified IT Professional (MCITP)	
E3	Microsoft Corporation	Microsoft Certified Professional (MCP)	
E5	Microsoft Corporation	Microsoft Certified Solutions Associate (MCSA): Windows 8	
E5	Microsoft Corporation	Microsoft Certified Solutions Associate (MCSA): Windows Server 2008	
E5	Microsoft Corporation	Microsoft Certified Solutions Associate (MCSA): Windows Server 2012	
E6	Microsoft Corporation	Microsoft Certified Solutions Expert (MCSE): Server Infrastructure	
E4	Microsoft Corporation	Microsoft Certified Technology Specialist (MCTS)	
E5	Microsoft Corporation	Microsoft Certified Trainer (MCT)/Learning Consultant (MCLC)	
E5	Microsoft Corporation	Microsoft Technology Associate (MTA)	
E6	Oracle Corporation	Oracle Certified Professional, Oracle Solaris 10 System Administrator	
E4	Transportation Security Administration	Transportation Worker Identification Credential (TWIC)	

Visit Navy COOL at https://www.cool.navy.mil/usn/ for additional Credentials that you may qualify to earn; however funding may be limited to your GI Bill.

UNITED SERVICES MILITARY APPRENTICESHIP PROGRAM (USMAP):

Rank	Apprenticeship	Date Completed
E1 - E9	Computer Operator	
E1 - E9	Computer Programmer (Professional & Kindred)	
E1 - E9	Electronics Mechanic	
E1 - E9	Electronics Mechanic (Any Industry)	
E1 - E9	Electronics Tester	
E1 - E9	Internetworking Technician	
E1 - E9	Radio Station Operator (Aircraft Mfg)	

Visit USMAP https://usmap.netc.navy.mil/usmapss/static/index.htm for additional information.

STAY NAVY

REENLIST / EXTEND: Request Chit/Form: _____ Guaranteed Assignment in Detailing (GUARD 2000): _____

Career Management System/Interactive Detailing (CMS/ID): _____

Medical/Dental Screening: _____ Command Recommendation (evaluation): _____ Bonus: _____ Ceremony: _____

TRANSFER:

15 Months	12 Months	9 Months	6 Months	Orders Received
Exception Family Member_____	EFM____	CMS/ID____	Accept Orders_____	Screening_____
CMS/ID_____	CMS/ID_____		Reverse Sponsor_____	Obligate_____
Continuous Overseas Tours (COT) _____			Relocation (FFSC) ____	Bonus_____
Overseas Tour Extension Incentive Program (OTEIP) _____			Medical/Dental_____	

For additional assistance in transfer and relocation, go to the Military HOMEFRONT website: http://www.public.navy.mil/bupers-npc/Pages/default.aspx and visit your Fleet and Family Support Center on base.

SEPARATING/RETIRE:

18 -12 months	6 months	90 days	30 days
Transition GPS _____	MED/DEN _____	Copy of Records_____	Copy of Records _____
Complete DD2648PSD_____	Relocation _____	Official Record CD_____	PSD_____
Transition Planning_____	Relocation Services (FFSC) _____	Arrange Ceremony_____	MED/DEN _____
	Reserve Affiliation_____	Request Leave / PTDY _____	
	VA/DVA_____		

PHYSICAL FITNESS:

Participate in a year-round physical fitness program to meet Navy fitness and BCA standards. Review and verify accuracy of PFA data in PRIMS within 60 days of the PFA cycle. (PRIMS is accessible through your BUPERS Online Account)

Height_____ Weight_____ If Required (Neck_____ Waist_____ Hips (Female) _____ BCA _____)

Last 2 PRT Cycles: Curl-ups_____/_____ Push-ups_____/_____ Run/Swim/Cardio_____/____ Overall Score_____/_____

List date (if) any PRT/BCA failure(s) over the last 5 years _____/_____ List if any Medical Waiver(s)_____/_____

For more information on Navy Fitness, visit: http://www.navyfitness.org/

PROFESSIONAL MILITARY EDUCATION

(Resident and non-resident coursework designed to enhance a Sailor's general military professional knowledge and abilities)

EDUCATION: (Prior to considering any pursuit of off duty education or program enrollment VISIT YOUR NAVY COLLEGE OFFICE or call the Virtual Education Center (VEC)!!!)

Education Plan Completed (Navy College Office/VEC _____Current Education Level_____

Degree Goal_____
Various distance learning degree options are available using, Sailor and Marine Online Academic Advisor (SMOLAA)

Goal: Date: AA/AS _____ BA/BS _____ Master _____
(Credits to earn a degree - AA/AS: 60 SH/90 QH, BA/BS: 120 SH/180, QH, Master /Doctorate: Variable based on program)

Number of current credits _____ American Council on Education (ACE) recommended credits_____

SOC DNS Agreement _____ Joint Service Transcripts (JST) _____ HS Transcripts_____ College Transcripts_____

Date Degree Obtained: AA/AS _____ BA/BS _____ Master _____ Doctorate _____

For entry into JST, send official transcripts to:
Naval Education and Training Professional Development and Technology Center
Attn: JST Operation Center N615
6490 Saufley Field Road
Pensacola, FL 32509
Phone: 1-877-838-1659
Comm: 757-492-4684
FAX: 757-492-5095
DSN: 492-4684
Email: VEC@navy.mil

VOLUNTARY EDUCATION (Study guides and exam preparations and practice test located on NKO)

NCPACE _____CLEP _____DSST _____TA _____MGIB _____Post 9/11 GIB_____AEV_____

SCPO REQUIRED NAVY PME:

Course Title	Course Location	CIN/CSE ID	Course Length	Date Completed
Senior Enlisted Academy [4,5]	Newport RI	P-920-1300	9 weeks (DL) / 3 weeks (F2F)	
ADAMS for Supervisors	Various Locations	S-501-0120	8 hours	
ADAMS for Facilitators	Various Locations	S-501-0110	16 hours	
Ethics Training	Command Delivered			
Required General Military Training Topics For FY 2016 (Standardized Core Training) [1]				
Antiterrorism Level I Awareness	NKO/Command Delivered	CENSECFOR-AT-010-1.0		
Combating Trafficking in Persons General Awareness	NKO/Command Delivered	DOD-CTIP-1.0		
Counterintelligence Awareness and Reporting	NKO/Command Delivered	DOD-CIAR-1.0		
Cyber Awareness Challenge V3	NKO/Command Delivered	DOD-IAA-V13.0		
Operations Security (Uncle Sam's OPSEC)	NKO/Command Delivered	NIOC-USOPSEC-2.0		
Privacy and Personally Identifiable Information	NKO/Command Delivered	DOD-PII-2.0		
Records Management	NKO/Command Delivered	DOR-RM-010-1.1		
Sexual Assault Prevention and Response Awareness (SAPR)	Command Delivered	CPPD-GMT-SAPRA-1.0 CC		
Equal Opportunity/Sexual Harassment/Grievance Procedures [2]	Command Delivered	CPPD-GMT-EOSH-1.0		
Suicide Prevention	Command Delivered	CPPD-GMT-SAP-1.0		
Required General Military Training Topics For FY 2016 (Command-Assigned Readiness –Enhancement topics; biennial periodicity) [3]				
Alcohol, Drug, and Tobacco Awareness	Command Delivered	CPPD-GMT-ADTA-1.0		
Domestic Violence Prevention and Reporting	NKO/Command Delivered	CPPD-GMT-DV-1.0		
Sexual Health and Responsibility	NKO/Command Delivered	CPPD-GMT-SHR-1.0		
Stress Management	Command Delivered	CPPD-GMT-SM-1.0		

1 - Verify GMT topics on NKO GMT web page.
2 - Course should be delivered in conjunction with SAPR. If not practicable, separate training is still required.
3 - Topics to be delivered once per deployment cycle. If deployment cycle is not applicable or exceeds two years between deployments, then deliver once every two years.
4 - NAVADMIN 266/14 Starting in FY 2017, all newly selected SCPO's will be required to complete the SEA
5 - Reserves selected to Senior Chief Petty Officer will also be required to complete (See NAVADMIN 266/14 for guidance)

SCPO REQUIRED COMMUNITY PME:

Course Title	Course Location	CIN/CSE ID	Course Length	Date Completed
Electronic Key Management System	NKO/PQS Page	NAVEDTRA 43462-1B	Self-paced	

SCPO RECOMMENDED NAVY PME:

Course Title	Course Location	CIN/CSE ID	Course Length	Date Completed
Chief's Mess Training (CMT/LCC) (21 modules available)	Command Delivered		Each Month	
Primary Enlisted Professional Military Education (PEPME)	NKO	Military DON/ PME	60 hours	
Block 1 Primary EPME - Introduction	NKO	PPME-SENL-B1		
Block 2 Primary EPME - The Culture of the Navy	NKO	PPME-SENL-B2		
Block 3 Primary EPME - Governance of the Navy	NKO	PPME-SENL-B3		
Block 4 Primary EPME - How the Navy Thinks About War	NKO	PPME-SENL-B4		
Block 5 Primary EPME - How the Navy Plans its Operations	NKO	PPME-SENL-B5		
Block 6 Primary EPME - Technology in the Maritime Domain	NKO	PPME-SENL-B6		
Block 7 Primary EPME - PME Conclusion	NKO	PPME-SENL-B7		
Joint Professional Military Education (JPME)	NOK	JKDDC-SNCO-2	60 hours	
Senior Enlisted Leadership Development Guide	NKO			
Culture	NKO or College Course	Foreign Language and Culture	45 hours	
CMDCM/COB Leadership Course (Must have FLTCM or FORCM recommendation)	NKO/Classroom (Newport, RI)	CPPD/NETC CMDCM-9580 COB-9579		
Navy Reserve Fundamentals for Active Duty Course	NKO	NAVRESFOR-NRF-2.0 / US DoN	10 hours	
Recommended General Military Training Topics For FY 2016 (Delivery determined by command discretion) [1]				
Energy Policy	Command Delivered	OPNAV-GMTE-1.0		
Hazing Policy and Prevention	Command Delivered	CPPD-GMT-HPP-1.0		
Operational Risk Management	NKO/Command Delivered	CPPD-GMT-ORM-1.0		
Personal Financial Management	Command Delivered	CPPD-GMT-PFM16-1.0		
Physical Readiness	NKO/Command Delivered	CPPD-GMT-PRT-2.0		

1 - Verify GMT topics on NKO GMT web page.

Courses with Recommended Reserve Points:

Commander Navy Reserve Forces (CNRF) N7 determines the number of reserve points awarded for completion of a course taken on Navy E-Learning. This listing should only be used as a guide and is subject to change by direction of CNFR N7.

Navy E-Learning has no control over how many, if any, reserve points are eventually awarded for the completion of a course. All questions concerning the award of reserve points should be directed to CNFR N7.

SCPO RECOMMENDED RESERVE PME:

Course Title	Course Location	CIN/CSE ID	Course Length	Date Completed
NROWS Orders Administration Course	NKO	R-500-0140/02PG /DoN	8 hours	
Naval Reserve Center Commanding Officer Officer In Charge	NKO	CNRFC-COOIC-1.0 /DoN	8 hours	
Guidance for Mobilization	NKO	CNRFC-GMB-1.1 /DoN	4 hours	
Military Sealift Command 101	NKO	CNRFC-MSC101 /DoN 1.1	24 hours	
Non-Prior Service Accession Program	NKO	CNRFC-NPSAP-2 /DoN 0	23 hours	

SCPO RECOMMENDED COMMUNITY PME:

Course Title	Course Location	CIN/CSE ID	Course Length	Date Completed
Information Assurance (IA)	NKO/PQS Page	NAVEDTRA 43466		

NAVY PROFESSIONAL READING PROGRAM (PRP)

The purpose of the Reading Program is to facilitate the professional and personal development of all Sailors. For additional information on changes, refer to NAVADMIN 309/12 or visit http://navyreading.dodlive.mil/ or http://navy.lib.overdrive.com/ or https://wwwa.nko.navy.mil

ESSENTIAL READING

WARFIGHTING FIRST	**Completed**
1812: The Navy's War *by George C. Daughan*	
Cybersecurity and Cyberwar: What Everyone Needs to Know *by P.W. Singer*	
SEAL of Honor *by Gary Williams*	
Leading with the Heart *by Mike Krzyzewski, Donald T. Phillips, and Grant Hill*	
The Twilight War *by David Crist*	
Wake of the Wahoo *by Forest J. Sterling*	
OPERATE FORWARD	**Completed**
The Crisis of Islam *by Bernard Lewis*	
Execute Against Japan *by LT Joel Holwitt, USN*	
Monsoon *by Robert Kaplan*	
Neptune's Inferno *by James D. Hornfischer*	
Red Star Over the Pacific *by Toshi Yoshihara and James Holmes*	
Fallout *by Catherine Collins and Douglas Frantz*	
BE READY	**Completed**
A Sailor's History of the U.S. Navy *by Thomas Cutler*	
In the Shadow of Greatness *by Joshua Welle, John Ennis, Katherine Kranz and Graham Plaster*	
Navigating the Seven Seas *by Melvin G. Williams, Sr. and Melvin G. Williams, Jr.*	
The Trident: The Forging and Reforging of a Navy SEAL Leader *by Jason Redman and John Bruning*	
Turn the Ship Around *by David Marquet*	
Wired for War *by P.W. Singer*	

Twenty-four additional books are categorized as "recommended reading," and are available as electronic books (e-books). Many can be downloaded at no cost through the Navy general library program site on Navy Knowledge On-line (NKO).

The entire list, with book summaries and additional information is available at http://navyreading.dodlive.mil/

The CNO-PRP has been streamlined to make our Navy's reading program more interactive, affordable, and wherever possible, electronically accessible. To that end: a number of the titles will be available for free at the NKO portal at https://wwwa.nko.navy.mil.

- Click on the reference tab, then e-library audio and e-books tab.
- In order to download books, an "overdrive" account is required. On the top right, click on the overdrive window and follow the prompts.
- Then, not only are the PRP books available, but also hundreds of other items.

Note: Security restrictions preclude downloading via Navy owned computers, so downloading them to personally-owned devices will be required.

SCPO RECOMMENDED COMMUNITY READING

Title	**Completed**
ACP 110; NKO/CID/IT page *by Allied Communication Publication*	
ACP 100, NATO SUPP-1 AIGs Instructions and Assignments ; NKO/CID/IT page *by Allied Communication Publication*	
ACP 120(Jun01), Common Security Protocol; NKO/CID/IT page *by Allied Communication Publication*	
ACP 121(H), Communication Instructions - General; NKO/CID/IT page *by Allied Communication Publication*	
ACP 122, Information Assurance for Allied Communications and Information Systems; NKO/CID/IT page *by Allied Communication Publication*	
ACP 123(A), Common Messaging Strategy & Procedure; NKO/CID/IT page *by Allied Communication Publication*	
ACP 124(D), Communication Instruction Radio Telegraph Procedure; NKO/CID/IT Page *by Allied Communication Publication*	
Communication Instructions Radiotelephone Procedures; NKO/CID/IT Page *ACP 125(F)*	
ACP 126(C), Communication Instruction Teletypewriter Procedure; NKO/CID/IT page *by Allied Communication*	

Title	Completed
Publication	
ACP 128(A), Allied Telecommunication Record System Operating Procedure; NKO/CID/IT page *by Allied Communication Publication*	
ACP 131, Communication Instructions Operating Signals; NKO/CID/IT page *by Allied Communication Publication*	
ACP 135, Communication Instructions Distress and Rescue Procedures; NKO/CID/IT page *by Allied Communication Publication*	
ACP 142, P_MUL - A Protocol for Reliable MULTICAST Messaging in Bandwidth Constrained and Delayed Acknowledgment(EMCOM) Environments; NKO/CID/IT page *by Allied Communication Publication*	
ACP 160, IFF/SIF Operational Procedures; NKO/CID/IT page *by Allied Communication Publication*	
ACP 167, Glossary of communications Electronics Terms; NKO/CID/IT page *by Allied Communication Publication*	
ACP 190 SUPP-1, Guide to Electromagnetic Spectrum Management in Military Operations; NKO/CID/IT page *by Allied Communication Publication*	
ACP 191, Ionospheric Sounder Operations; NKO/CID/IT page *by Allied Communication Publication*	
ACP 193, Ground Routing Protocol for use with Automatic Link Establishment (ALR) Capable HF Radios; NKO/CID/IT page *by Allied Communication Publication*	
ACP 220(Jun03), Multination Video Conferencing Services Automatic Digital Network (AUTODIN) Operating Procedures; NKO/CID/IT page *by Allied Communication Publication*	
Automatic Digital Network (AUTODIN) Operating Procedures *NKO/CID/IT Page*	
C4I IT21 Manager *NKO/CID/IT page*	
CMS-6 *NKO/CID/IT page*	
Communication Security Instruction 2000.2, Military Sealift Command Communication Policy and Procedures Manual *NKO/CID/IT page*	
Department of Navy Directive 8500.1 Information Assurance	
Department of Defense Instruction 8500.2 *NKO/CID/IT page*	
Department of Defense Instruction 8510.1 *NKO/CID/IT page*	
Department of Defense Instruction 8510.BB *NKO/CID/IT page*	
Electronic Key Management System (EKMS)	
EE130-AG-HBK-020, Extremely High Frequency (EHF) Low Data Rate (LDR) and Medium Data Rate (MDR) System User's Handbook *NKO/CID/IT Page*	
Federal Information Processing Standard FIPS 83, Guidelines on users Authentication Techniques for Computer Network Access Control *NKO/CID/IT Page*	
Federal Information Processing Standard (FIPS) 48, Guideline: On Evaluation of Techniques for Automated Personal Identifications *NKO/CID/IT Page*	
Federal Information Processing Standard(FIPS) 11-3,Guideline:American National Dictionary for Information Processing Systems *NKO/CID/IT Page*	
INMARSAT B High Speed Data Satellite Communication System EE 130-JW-SOM-010 *NKO/CID/IT Page*	
Joint Army-Navy-Air Force Publication, JANAP 128(J), Automatic Digital Network (AUTODIN) Operating Procedures; NKO/CID/IT Page	
National Security Agency NAG 16 (F) *NKO/CID/IT page*	
Naval Tactics Techniques Procedure 6-02, C4I Infrastructure; NKO/CID/IT Page	
Naval Telecommunications Procedures, NTP 2 Section 1 (E), Navy Super High Frequency Satellite Communications; NKO/CID/IT Page	
Naval Telecommunications Procedures, NTP 2 Section 2 (E), Navy Ultra High Frequency Satellite Communications; NKO/CID/IT Page	
Naval Telecommunications Procedures, NTP 2 Section 3 (B), Navy Extremely High Frequency Satellite Communications; NKO/CID/IT Page	
Naval Telecommunications Procedures, NTP 2 Section 4 (A), Navy Commercial Satellite Communication; NKO/CID/IT page	
Naval Telecommunications Procedures, NTP 2 Section 5 (Oct01), Navy Satellite Communications (SATCOM) Broadcast Services; NKO/CID/IT page	
Naval Telecommunications Procedures, NTP 3(K), Telecommunications Users Manual Operating Procedures; NKO/CID/IT page	
Fleet Communications; NKO/CID/IT Page *NTP 4 (E)*	

Title	Completed
Naval Telecommunications Procedures, NTP 21, Defense Message System User's Manual; NKO/CID/IT Page	
Naval Telecommunications Procedures, NTP 22 Defense Message System Local Operations And Network Management Policies and Procedures; NKO/CID/IT Page	
Naval Warfare Publication 1-03.1 Operational Reports; NKO/CID/IT page	
Naval Warfare Publication 5-01 Naval Operational Planning; NKO/CID/IT Page	
Operational Naval Instruction 3100.6 *NKO/CID/IT page*	
Navy/Marine Implementation of National Policy on Control of Compromising Emanation *OPNAVINST C5510.93F*	
Department of the Navy Security Classification Guides *OPNAVINST 5513.1*	
Navy Information Assurance Program *OPNAVINST 5239.1*	
Department of the Navy Personnel Security Program *SECNAV M-5510.30 Series*	
Department of the Navy Information Security Program *SECNAV M-5510.36*	
Department of the Navy Policy for Publicly Accessible World Wide Sites *SECNAV M-5720.47A*	

Information Systems Technician
Master Chief Petty Officer
(Master)

NAME_____

SKILL TRAINING

(Schools, courses and assignments directly related to occupation)

REQUIRED SKILL TRAINING

Course Title	Course Location	CIN/CSE ID	Course Length	Date Completed
See initial skills training from E1-E8 section				

RECOMMENDED SKILL TRAINING

Course Title	Course Location	CIN/CSE/ACE ID	Course Length	Date Completed
Senior Professional In Human Resources (SPHR)	Human Resource Certification Institute			
Automated Digital Network System (ADNS) Family of Systems variants F and/or H	Various	A-101-1122 / A-101-1125	12 days	
Digital Wideband Transmission System (DWTS) Operator	Norfolk, VA / San Diego, CA	A-260-0360	4 days	
Digital Modular Radio(DMR)	Norfolk, VA / San Diego CA	A-260-1955	4 days	
Electronic Key Management System Manager	Naples, IT Dam Neck, VA Mayport, FL Groton CT, Kings Bay, GA San Diego, CA Pearl Harbor, HI Kings Bay, GA Yokosuka, Japan Bangor, WA	V-4C-0013	23 days	
Secret Compartmental Information (SCI) Network System Administrator	San Diego CA	W-3B-1112	5 days	
Secret Compartmental Information (SCI) Network Operator	Norfolk, VA/ San Diego CA,	W-3B-1111	12 days	
Information and Communication Manager (ICMC)	Norfolk VA, San Diego CA	A-202-0041	19 days	

NAVY ENLISTED CLASSIFICATION CODE (NEC) OPPORTUNITIES

Course Title	Course Location	CIN/CSE/ACE ID	Course Length	Date Completed
2710, 2765, 2766 - Global Command Control System Maritime (GCCS-M) System Administrator for 4.X/ 4.0.3/ 4.1 Family of Systems	Dam Neck, VA / San Diego, CA	A-150-0045 / A-150-3400 / A-150-3500	26 days	
2301 - Enlisted Frequency Manager	Keesler AFB, MS	A-202-0039	96 days	
2302 - Joint Task Force Spectrum	Keesler AFB, MS	A-202-0008	16 days	
2779 - Information Systems Security Manager (ISSM)	Groton CT, Bangor, WA Kings Bay GA, Dam Neck, VA Yokosuka, Japan San Diego CAPearl Harbor, HI	A531-0009	2 weeks 10 Instructional Days	
9613 - Special Operation Radio Operator	Fort Bragg, NC	S-101-0001	159 days	
9502 - Navy Instructor Training Course (NITC)	Various Locations	A-012-0077	19 days	

JOB DESCRIPTION

The IT Technician is comprised of personnel who perform core and specialty functions of Network Administration, Communications Operations and Message Processing.

In the area of **Network Administration**, IT Technicians provide technical assistance to computer system users. They answer questions and/or resolve computer problems for clients. IT Technicians provide assistance concerning the use of computer hardware and software, including printing, installation, word-processing, electronic mail, and operating systems. They conduct help desk functions and repair fiber optics and a variety of cables. Additionally, IT Technicians conduct day-to-day operations such as system backups and restores, and add, modify, or delete user accounts. They install operating systems, applications and peripherals, troubleshoot user problems, debug command language scripts, and assist the Information Systems Security Officer (ISSO) in access control security (i.e., passwords, access and control lists, etc).

They may also perform advanced Network operations, administration, maintenance and training. IT Technicians analyze, design, test, and evaluate network systems, Internet, Intranet, and other data communications systems. They perform network modeling, analysis, and planning. They research and recommend network and data communications hardware and software solutions. IT Technicians may also perform Network Enterprise Architecture Cyber Security. They defend Navy networks from cyber threats utilizing hardware/software defense in depth methodology to prevent cyber-attacks.

In the area of **Communications Operations**, IT Technicians establish, monitor, and maintain radio frequency (RF) communications systems both ashore and afloat. Specifically, they plan, coordinate establishment, monitor, troubleshoot, and restore classified and unclassified RF communication systems that support exchange of voice, data, video and imagery using terrestrial or satellite VLF, LF, MF, HF, VHF, UHF, SHF and EHF frequency spectrums afloat and ashore. Additionally, specialists in this area may perform spectrum management - coordinate and generate frequency assignments for use within an area of responsibility, assess the impact of new frequency requirements upon the existing radio frequency environment, maintain a history of interference incidents and frequency employment files, initiate action as appropriate to prevent and/or correct harmful interference, and resolve joint and space interference.

In the area of **Message Processing**, IT Technicians provide message handling, storage, and retrieval of incoming and outgoing messages afloat and ashore. They maintain connectivity between shipboard LAN and message delivery systems ashore. They administer user profiles, and maintain directory information trees. IT Technicians operate the Message Systems, NAVMACS, and other automated message processing systems.

RECOMMENDED BILLET ASSIGNMENTS

The Information System Technician of the 21st century operate and maintain the Navy's global satellite telecommunications systems, local and wide area networks, and micro-computer systems used in the fleet. Advanced global C4I support is provided it units ashore and sea.

Other Opportunities:

- Joint Assignments
- Global Support Assignments
- Special Assignments

PERSONAL AND PROFESSIONAL DEVELOPMENT (Completed at reporting 30 day Career Development Board)

Command Address: _____ QD Phone Number: _____

_____

Division Officer: _____ Phone Number: _____

Command Master Chief: _____ Phone Number: _____

Sponsor/Mentor: _____ Phone Number: _____

Depart/Division Career Counselor: _____ Phone Number: _____

Phone Number: _____

ADSD: _____ REPORT DATE: _____ EAOS: _____ PRD: _____ SEA / SHORE: _____/____

HYT Date: _____ Security Clearance Level: _____ Date Last updated: _____ Command INDOC complete: _____

CAREER DEVELOPMENT BOARDS: Use OPNAVINST 1040.11(ser) & Career Counselor Handbook NAVPERS 15878
(E9) Reason for Convening/Discussion Items: (Upon completion update (CIMS) Career Information Management System)

Reporting (within 30 days for active duty or three drill weekends for SELRES) (Date Conducted): _____

6 Month: _____ 12 Month: _____ 24 Month: _____36 Month: _____48 Month: _____

60 Month: _____ CPO 365: _____ Special Program: _____ Member Request: _____

HYT 24 months (Date): _____ HYT 12 months (Date): _____ HYT Waiver Date: _____Approve/Disapprove

CMS/ID 13 months to PRD: _____ Transfer: _____

Early Separation: _____ Fleet Reserve Retirement Options:_____

Physical Fitness Test Failure: _____ Career Status Bonus (election message received): _____

Enlisted to Officer Commissioning Program Application & Administration Manual OPNAVINST 1420.1(series):

Commissioning Programs Applications: _____ (prior to submission, command endorsement):_____

Medical Enlisted Commissioning Program (MECP) _____ Medical Service Corps In-service Procurement _____

Officer Candidate School _____ Limited Duty Officer _____ Chief Warrant Officer _____

Navy Leader Planning Guide: Log on to NKO and select the Leadership Tab to access this guide.

QUALIFICATIONS AND CERTIFICATIONS

Sea/Shore General Qualifications **Watch Standing Qualifications**	**Report Date**	**Completion Date** **(If qualification is not required place N/A in this Block)**
Ship Board Fire Fighting		
Aviation Fire Fighting		
Basic Damage Control		
Advanced Damage Control		
3M 303 Work Center Supervisor		
3M 304 LCPO/Division Officer		
Section Leader		
Officer of the Deck (OOD) (In Port)		
Command Duty Officer (CDO)		
Junior Officer of the Deck (JOOD)		
Officer of the Deck (OOD) (At Sea)		
Personal Qualifications Standard		

Mandatory warfare qualification for enlisted Sailors assigned to designated warfare qualifying commands:

Warfare qualification programs	**Report Date**	**Completion Date** **(If qualification is not required place N/A in this Block)**
Aviation Warfare Specialist		
Expeditionary Warfare Specialist		
Fleet Marine Forces		
Information Dominance Warfare Specialist		
SEABEE Combat Warfare		
Surface Warfare Specialist		

Rate Specific/Department Qualifications (Add)	**Report Date**	**Completion Date** **(If qualification is not required place N/A in this Block)**

CERTIFICATIONS

The following post military occupations are similar to the IT-Information Systems Technician Rating. For more information about these occupations, visit NAVY COOL at https://www.cool.navy.mil/usn/.

Occupation (Civilian Employer)
Broadcast Technicians
Computer and Information Systems Managers
Computer Network Architects
Computer Network Support Specialists
Computer Operators
Computer Programmers
Computer Systems Analysts
Computer User Support Specialists
Computer, Automated Teller, and Office Machine Repairers
Database Administrators
Electronics Engineering Technicians
Information Security Analysts
Information Technology Project Managers
Inspectors, Testers, Sorters, Samplers, and Weighers
Network and Computer Systems Administrators
Radio Operators
Radio, Cellular, and Tower Equipment Installers and Repairers
Telecommunications Engineering Specialists
Telecommunications Equipment Installers and Repairers, Except Line Installers

Occupation (Federal Employer)
0132 - Intelligence Series
0335 - Computer Clerk and Assistant Series
0394 - Communications Clerical Series
2210 - Information Technology Management Series
2608 - Electronic Digital Computer Mechanic
9944 - Electronics Technician

Navy COOL: The following certifications and licenses are applicable to the IT-Information Systems Technician rating. *They may require additional education, training or experience.*

Target paygrade	Certifying Agency	Credential Title	Date Completed
E5	American Board for Certification in Homeland Security (ABCHS)	Certified in Homeland Security Level V (CHS-V)	
E4	AXELOS	ITIL Foundation Level	
E5	Cisco Systems, Inc.	Cisco Certified Design Associate (CCDA)	
E6	Cisco Systems, Inc.	Cisco Certified Design Professional (CCDP)	
E4	Cisco Systems, Inc.	Cisco Certified Entry Networking Technician (CCENT)	
E5	Cisco Systems, Inc.	Cisco Certified Network Associate (CCNA) Routing and Switching	
E4	Cisco Systems, Inc.	Cisco Certified Network Associate (CCNA) Security	
E6	Cisco Systems, Inc.	Cisco Certified Network Professional (CCNP) Routing and Switching	
E5	Cisco Systems, Inc.	Cisco Cybersecurity Specialist	
E3	Computing Technology Industry Association (CompTIA)	CompTIA A+ ce	
E7	Computing Technology Industry Association (CompTIA)	CompTIA Advanced Security Practitioner (CASP) ce	
E4	Computing Technology Industry Association (CompTIA)	CompTIA Linux+ Powered by LPI	
E4	Computing Technology Industry Association (CompTIA)	CompTIA Network+ ce	
E4	Computing Technology Industry Association (CompTIA)	CompTIA Security+ ce	
E5	Computing Technology Industry Association (CompTIA)	CompTIA Server+	
E3	Electronics Technicians Association, International (ETA-I)	Apprentice (APP)	
E4	Electronics Technicians Association, International (ETA-I)	Fiber Optics Installer (FOI)	
E5	Electronics Technicians Association, International (ETA-I)	Fiber Optics Technician (FOT)	
E3	Electronics Technicians Association, International (ETA-I)	General Communications Technician - Level 1 (GCT1)	
E6	Global Information Assurance Certification (GIAC)	GIAC Certified Incident Handler (GCIH)	
E7	Global Information Assurance Certification (GIAC)	GIAC Certified Intrusion Analyst (GCIA)	
E7	Global Information Assurance Certification (GIAC)	GIAC Global Industrial Cyber Security Professional (GICSP)	
E7	Global Information Assurance Certification (GIAC)	GIAC Information Security Fundamentals (GISF)	
E5	Global Information Assurance Certification (GIAC)	GIAC Security Essentials Certification (GSEC)	
E7	Global Information Assurance Certification (GIAC)	GIAC Security Expert (GSE)	
E6	Global Information Assurance Certification (GIAC)	GIAC Security Leadership Certification (GSLC)	
E6	Information Systems Audit and Control Association (ISACA)	Certified Information Security Manager (CISM)	
E6	Information Systems Audit and Control Association (ISACA)	Certified Information Systems Auditor (CISA)	
E5	International Association of Privacy Professionals (IAPP)	Certified Information Privacy Technologist (CIPT)	
E5	International Information Systems Security Certification Consortium, Inc. ((ISC)2)	Associate of ISC2	
E7	International Information Systems Security Certification Consortium, Inc. ((ISC)2)	Certified Information Systems Security Professional (CISSP)	
E5	International Information Systems Security Certification Consortium, Inc. ((ISC)2)	Systems Security Certified Practitioner (SSCP)	
E4	Microsoft Corporation	Microsoft Certified IT Professional (MCITP)	
E3	Microsoft Corporation	Microsoft Certified Professional (MCP)	
E5	Microsoft Corporation	Microsoft Certified Solutions Associate (MCSA): Windows 8	
E5	Microsoft Corporation	Microsoft Certified Solutions Associate (MCSA): Windows Server 2008	
E5	Microsoft Corporation	Microsoft Certified Solutions Associate (MCSA): Windows Server 2012	
E6	Microsoft Corporation	Microsoft Certified Solutions Expert (MCSE): Server Infrastructure	
E4	Microsoft Corporation	Microsoft Certified Technology Specialist (MCTS)	
E5	Microsoft Corporation	Microsoft Certified Trainer (MCT)/Learning Consultant (MCLC)	
E5	Microsoft Corporation	Microsoft Technology Associate (MTA)	
E6	Oracle Corporation	Oracle Certified Professional, Oracle Solaris 10 System Administrator	
E4	Transportation Security Administration	Transportation Worker Identification Credential (TWIC)	

Visit Navy COOL at https://www.cool.navy.mil/usn/ for additional Credentials that you may qualify to earn; however funding may be limited to your GI Bill.

UNITED SERVICES MILITARY APPRENTICESHIP PROGRAM (USMAP):

Rank	Apprenticeship	Date Completed
E1 - E9	Computer Operator	
E1 - E9	Computer Programmer (Professional & Kindred)	
E1 - E9	Electronics Mechanic	
E1 - E9	Electronics Mechanic (Any Industry)	
E1 - E9	Electronics Tester	
E1 - E9	Internetworking Technician	
E1 - E9	Radio Station Operator (Aircraft Mfg)	

Visit USMAP https://usmap.netc.navy.mil/usmapss/static/index.htm for additional information.

STAY NAVY

REENLIST / EXTEND: Request Chit/Form: _____ Guaranteed Assignment in Detailing (GUARD 2000): _____

Career Management System/Interactive Detailing (CMS/ID): _____

Medical/Dental Screening: _____ Command Recommendation (evaluation): _____ Bonus: _____ Ceremony: _____

TRANSFER:

15 Months	12 Months	9 Months	6 Months	Orders Received
Exception Family Member_____	EFM____	CMS/ID____	Accept Orders_____	Screening_____
CMS/ID_____	CMS/ID_____		Reverse Sponsor_____	Obligate_____
Continuous Overseas Tours (COT) _____			Relocation (FFSC) ____	Bonus_____
Overseas Tour Extension Incentive Program (OTEIP) _____			Medical/Dental_____	

For additional assistance in transfer and relocation, go to the Military HOMEFRONT website: http://www.public.navy.mil/bupers-npc/Pages/default.aspx and visit your Fleet and Family Support Center on base.

SEPARATING/RETIRE:

18 -12 months	6 months	90 days	30 days
Transition GPS _____	MED/DEN _____	Copy of Records_____	Copy of Records _____
Complete DD2648PSD_____	Relocation _____	Official Record CD_____	PSD_____
Transition Planning_____	Relocation Services (FFSC) _____	Arrange Ceremony_____	MED/DEN _____
	Reserve Affiliation_____	Request Leave / PTDY _____	
	VA/DVA_____		

PHYSICAL FITNESS:

Participate in a year-round physical fitness program to meet Navy fitness and BCA standards. Review and verify accuracy of PFA data in PRIMS within 60 days of the PFA cycle. (PRIMS is accessible through your BUPERS Online Account)

Height_____ Weight_____ If Required (Neck_____ Waist_____ Hips (Female) _____ BCA _____)

Last 2 PRT Cycles: Curl-ups_____/_____ Push-ups_____/_____ Run/Swim/Cardio_____/____ Overall Score_____/_____

List date (if) any PRT/BCA failure(s) over the last 5 years _____/_____ List if any Medical Waiver(s)_____/_____

For more information on Navy Fitness, visit: http://www.navyfitness.org/

PROFESSIONAL MILITARY EDUCATION

(Resident and non-resident coursework designed to enhance a Sailor's general military professional knowledge and abilities)

EDUCATION: (Prior to considering any pursuit of off duty education or program enrollment VISIT YOUR NAVY COLLEGE OFFICE or call the Virtual Education Center (VEC)!!!)

Education Plan Completed (Navy College Office/VEC _____Current Education Level_____

Degree Goal_____
Various distance learning degree options are available using, Sailor and Marine Online Academic Advisor (SMOLAA)

Goal: Date: AA/AS _____ BA/BS _____ Master _____
(Credits to earn a degree - AA/AS: 60 SH/90 QH, BA/BS: 120 SH/180, QH, Master /Doctorate: Variable based on program)

Number of current credits _____ American Council on Education (ACE) recommended credits_____

SOC DNS Agreement _____ Joint Service Transcripts (JST) _____ HS Transcripts_____ College Transcripts_____

Date Degree Obtained: AA/AS _____ BA/BS _____ Master _____ Doctorate _____

For entry into JST, send official transcripts to:
Naval Education and Training Professional Development and Technology Center
Attn: JST Operation Center N615
6490 Saufley Field Road
Pensacola, FL 32509
Phone: 1-877-838-1659
Comm: 757-492-4684
FAX: 757-492-5095
DSN: 492-4684
Email: VEC@navy.mil

VOLUNTARY EDUCATION (Study guides and exam preparations and practice test located on NKO)

NCPACE _____CLEP _____DSST _____TA _____MGIB _____Post 9/11 GIB_____AEV_____

MCPO REQUIRED NAVY PME:

Course Title	Course Location	CIN/CSE ID	Course Length	Date Completed
Joint Professional Military Education (JPME)	War College	Military DON / PME	40 hours	
Senior Enlisted Academy [4]	Newport RI	P-920-1300	9 weeks (DL) / 3 weeks (F2F)	
ADAMS for Supervisors	Various Locations	S-501-0120	8 hours	
ADAMS for Facilitators	Various Locations	S-501-0110	16 hours	
Ethics Training	Command Delivered			
Required General Military Training Topics For FY 2016 (Standardized Core Training) [1]				
Antiterrorism Level I Awareness	NKO/Command Delivered	CENSECFOR-AT-010-1.0		
Combating Trafficking in Persons General Awareness	NKO/Command Delivered	DOD-CTIP-1.0		
Counterintelligence Awareness and Reporting	NKO/Command Delivered	DOD-CIAR-1.0		
Cyber Awareness Challenge V3	NKO/Command Delivered	DOD-IAA-V13.0		
Operations Security (Uncle Sam's OPSEC)	NKO/Command Delivered	NIOC-USOPSEC-2.0		
Privacy and Personally Identifiable Information	NKO/Command Delivered	DOD-PII-2.0		
Records Management	NKO/Command Delivered	DOR-RM-010-1.1		
Sexual Assault Prevention and Response Awareness (SAPR)	Command Delivered	CPPD-GMT-SAPRA-1.0 CC		
Equal Opportunity/Sexual Harassment/Grievance Procedures [2]	Command Delivered	CPPD-GMT-EOSH-1.0		
Suicide Prevention	Command Delivered	CPPD-GMT-SAP-1.0		
Required General Military Training Topics For FY 2016 (Command-Assigned Readiness –Enhancement topics; biennial periodicity) [3]				
Alcohol, Drug, and Tobacco Awareness	Command Delivered	CPPD-GMT-ADTA-1.0		
Domestic Violence Prevention and Reporting	NKO/Command Delivered	CPPD-GMT-DV-1.0		
Sexual Health and Responsibility	NKO/Command Delivered	CPPD-GMT-SHR-1.0		
Stress Management	Command Delivered	CPPD-GMT-SM-1.0		

1 - Verify GMT topics on NKO GMT web page.
2 - Course should be delivered in conjunction with SAPR. If not practicable, separate training is still required.
3 - Topics to be delivered once per deployment cycle. If deployment cycle is not applicable or exceeds two years between deployments, then deliver once every two years.
4 - Course remains a requirement to become a Command Master Chief/Chief of the Boat.

MCPO REQUIRED COMMUNITY PME:

Course Title	Course Location	CIN/CSE ID	Course Length	Date Completed
None				

MCPO RECOMMENDED NAVY PME:

Course Title	Course Location	CIN/CSE ID	Course Length	Date Completed
Chief's Mess Training (CMT/LCC) (21 modules available)	Command Delivered		Each Month	
Primary Enlisted Professional Military Education (PEPME)	NKO	Military DON/ PME	60 hours	
Block 1 Primary EPME - Introduction	NKO	PPME-SENL-B1		
Block 2 Primary EPME - The Culture of the Navy	NKO	PPME-SENL-B2		
Block 3 Primary EPME - Governance of the Navy	NKO	PPME-SENL-B3		
Block 4 Primary EPME - How the Navy Thinks About War	NKO	PPME-SENL-B4		
Block 5 Primary EPME - How the Navy Plans its Operations	NKO	PPME-SENL-B5		
Block 6 Primary EPME - Technology in the Maritime Domain	NKO	PPME-SENL-B6		
Block 7 Primary EPME - PME Conclusion	NKO	PPME-SENL-B7		
Joint Professional Military Education (JPME)	NOK	JKDDC-SNCO-2	60 hours	
Senior Enlisted Leadership Development Guide	NKO			
CMDCM/COB Leadership Course (Must have fleet recommendation)	NKO/Classroom (Newport, RI)	CPPD/NETC CMDCM-9580 COB-9579		
Culture	NKO or College Course	Foreign Language and Culture	45 hours	
Selection Board Member	NKO	NPC-SBM-2.0	1 hour	
Recommended General Military Training Topics For FY 2016 (Delivery determined by command discretion) [1]				
Energy Policy	Command Delivered	OPNAV-GMTE-1.0		
Hazing Policy and Prevention	Command Delivered	CPPD-GMT-HPP-1.0		
Operational Risk Management	NKO/Command Delivered	CPPD-GMT-ORM-1.0		
Personal Financial Management	Command Delivered	CPPD-GMT-PFM16-1.0		
Physical Readiness	NKO/Command Delivered	CPPD-GMT-PRT-2.0		

1 - Verify GMT topics on NKO GMT web page.

Courses with Recommended Reserve Points:

Commander Navy Reserve Forces (CNRF) N7 determines the number of reserve points awarded for completion of a course taken on Navy E-Learning. This listing should only be used as a guide and is subject to change by direction of CNFR N7.

Navy E-Learning has no control over how many, if any, reserve points are eventually awarded for the completion of a course. All questions concerning the award of reserve points should be directed to CNFR N7.

MCPO RECOMMENDED RESERVE PME:

Course Title	Course Location	CIN/CSE ID	Course Length	Date Completed
NROWS Orders Administration Course	NKO	R-500-0140/02PG /DoN	8 hours	
Naval Reserve Center Commanding Officer Officer In Charge	NKO	CNRFC-COOIC-1.0 /DoN	8 hours	
Guidance for Mobilization	NKO	CNRFC-GMB-1.1 /DoN	4 hours	
Military Sealift Command 101	NKO	CNRFC-MSC101 /DoN 1.1	24 hours	
Non-Prior Service Accession Program	NKO	CNRFC-NPSAP-2 /DoN 0	23 hours	

MCPO RECOMMENDED COMMUNITY PME:

Course Title	Course Location	CIN/CSE ID	Course Length	Date Completed
Information Assurance (IA)	NKO/PQS Page	NAVEDTRA 43466		

NAVY PROFESSIONAL READING PROGRAM (PRP)

The purpose of the Reading Program is to facilitate the professional and personal development of all Sailors. For additional information on changes, refer to NAVADMIN 309/12 or visit http://navyreading.dodlive.mil/ or http://navy.lib.overdrive.com/ or https://wwwa.nko.navy.mil

ESSENTIAL READING

WARFIGHTING FIRST	**Completed**
1812: The Navy's War *by George C. Daughan*	
Cybersecurity and Cyberwar: What Everyone Needs to Know *by P.W. Singer*	
SEAL of Honor *by Gary Williams*	
Leading with the Heart *by Mike Krzyzewski, Donald T. Phillips, and Grant Hill*	
The Twilight War *by David Crist*	
Wake of the Wahoo *by Forest J. Sterling*	
OPERATE FORWARD	**Completed**
The Crisis of Islam *by Bernard Lewis*	
Execute Against Japan *by LT Joel Holwitt, USN*	
Monsoon *by Robert Kaplan*	
Neptune's Inferno *by James D. Hornfischer*	
Red Star Over the Pacific *by Toshi Yoshihara and James Holmes*	
Fallout *by Catherine Collins and Douglas Frantz*	
BE READY	**Completed**
A Sailor's History of the U.S. Navy *by Thomas Cutler*	
In the Shadow of Greatness *by Joshua Welle, John Ennis, Katherine Kranz and Graham Plaster*	
Navigating the Seven Seas *by Melvin G. Williams, Sr. and Melvin G. Williams, Jr.*	
The Trident: The Forging and Reforging of a Navy SEAL Leader *by Jason Redman and John Bruning*	
Turn the Ship Around *by David Marquet*	
Wired for War *by P.W. Singer*	

Twenty-four additional books are categorized as "recommended reading," and are available as electronic books (e-books). Many can be downloaded at no cost through the Navy general library program site on Navy Knowledge On-line (NKO).

The entire list, with book summaries and additional information is available at http://navyreading.dodlive.mil/

The CNO-PRP has been streamlined to make our Navy's reading program more interactive, affordable, and wherever possible, electronically accessible. To that end: a number of the titles will be available for free at the NKO portal at https://wwwa.nko.navy.mil.

- Click on the reference tab, then e-library audio and e-books tab.
- In order to download books, an "overdrive" account is required. On the top right, click on the overdrive window and follow the prompts.
- Then, not only are the PRP books available, but also hundreds of other items.

Note: Security restrictions preclude downloading via Navy owned computers, so downloading them to personally-owned devices will be required.

MCPO RECOMMENDED COMMUNITY READING

Title	**Completed**
ACP 110; NKO/CID/IT page *by Allied Communication Publication*	
ACP 100, NATO SUPP-1 AIGs Instructions and Assignments ; NKO/CID/IT page *by Allied Communication Publication*	
ACP 120(Jun01), Common Security Protocol; NKO/CID/IT page *by Allied Communication Publication*	
ACP 121(H), Communication Instructions - General; NKO/CID/IT page *by Allied Communication Publication*	
ACP 122, Information Assurance for Allied Communications and Information Systems; NKO/CID/IT page *by Allied Communication Publication*	
ACP 123(A), Common Messaging Strategy & Procedure; NKO/CID/IT page *by Allied Communication Publication*	
ACP 124(D), Communication Instruction Radio Telegraph Procedure; NKO/CID/IT Page *by Allied Communication Publication*	
Communication Instructions Radiotelephone Procedures; NKO/CID/IT page *ACP 125(F)*	
ACP 126(C), Communication Instruction Teletypewriter Procedure; NKO/CID/IT page *by Allied Communication*	

Title	Completed
Publication	
ACP 128(A), Allied Telecommunication Record System Operating Procedure; NKO/CID/IT page *by Allied Communication Publication*	
ACP 131, Communication Instructions Operating Signals; NKO/CID/IT page *by Allied Communication Publication*	
ACP 135, Communication Instructions Distress and Rescue Procedures; NKO/CID/IT page *by Allied Communication Publication*	
ACP 142, P_MUL - A Protocol for Reliable MULTICAST Messaging in Bandwidth Constrained and Delayed Acknowledgment(EMCOM) Environments; NKO/CID/IT page *by Allied Communication Publication*	
ACP 160, IFF/SIF Operational Procedures; NKO/CID/IT page *by Allied Communication Publication*	
ACP 167, Glossary of communications Electronics Terms; NKO/CID/IT page *by Allied Communication Publication*	
ACP 190 SUPP-1, Guide to Electromagnetic Spectrum Management in Military Operations; NKO/CID/IT page *by Allied Communication Publication*	
ACP 191, Ionospheric Sounder Operations; NKO/CID/IT page *by Allied Communication Publication*	
ACP 193, Ground Routing Protocol for use with Automatic Link Establishment (ALR) Capable HF Radios; NKO/CID/IT page *by Allied Communication Publication*	
ACP 220(Jun03), Multination Video Conferencing Services Automatic Digital Network (AUTODIN) Operating Procedures; NKO/CID/IT page *by Allied Communication Publication*	
Automatic Digital Network (AUTODIN) Operating Procedures *NKO/CID/IT Page*	
C4I IT21 Manager *NKO/CID/IT page*	
CMS-6 *NKO/CID/IT page*	
Communication Security Instruction 2000.2, Military Sealift Command Communication Policy and Procedures Manual *NKO/CID/IT page*	
Department of Navy Directive 8500.1 Information Assurance	
Department of Defense Instruction 8500.2 *NKO/CID/IT page*	
Department of Defense Instruction 8510.1 *NKO/CID/IT page*	
Department of Defense Instruction 8510.BB *NKO/CID/IT page*	
Electronic Key Management System (EKMS)	
EE130-AG-HBK-020, Extremely High Frequency (EHF) Low Data Rate (LDR) and Medium Data Rate (MDR) System User's Handbook *NKO/CID/IT Page*	
Federal Information Processing Standard FIPS 83, Guidelines on users Authentication Techniques for Computer Network Access Control *NKO/CID/IT Page*	
Federal Information Processing Standard (FIPS) 48, Guideline: On Evaluation of Techniques for Automated Personal Identifications *NKO/CID/IT Page*	
Federal Information Processing Standard(FIPS) 11-3,Guideline:American National Dictionary for Information Processing Systems *NKO/CID/IT Page*	
INMARSAT B High Speed Data Satellite Communication System EE 130-JW-SOM-010 *NKO/CID/IT Page*	
Joint Army-Navy-Air Force Publication, JANAP 128(J), Automatic Digital Network (AUTODIN) Operating Procedures; NKO/CID/IT Page	
National Security Agency NAG 16 (F) *NKO/CID/IT page*	
Naval Tactics Techniques Procedure 6-02, C4I Infrastructure; NKO/CID/IT Page	
Naval Telecommunications Procedures, NTP 2 Section 1 (E), Navy Super High Frequency Satellite Communications; NKO/CID/IT Page	
Naval Telecommunications Procedures, NTP 2 Section 2 (E), Navy Ultra High Frequency Satellite Communications; NKO/CID/IT Page	
Naval Telecommunications Procedures, NTP 2 Section 3 (B), Navy Extremely High Frequency Satellite Communications; NKO/CID/IT Page	
Naval Telecommunications Procedures, NTP 2 Section 4 (A), Navy Commercial Satellite Communication; NKO/CID/IT page	
Naval Telecommunications Procedures, NTP 2 Section 5 (Oct01), Navy Satellite Communications (SATCOM) Broadcast Services; NKO/CID/IT page	
Naval Telecommunications Procedures, NTP 3(K), Telecommunications Users Manual Operating Procedures; NKO/CID/IT page	
Fleet Communications; NKO/CID/IT Page *NTP 4 (E)*	

Title	Completed
Naval Telecommunications Procedures, NTP 21, Defense Message System User's Manual; NKO/CID/IT Page	
Naval Telecommunications Procedures, NTP 22 Defense Message System Local Operations And Network Management Policies and Procedures; NKO/CID/IT Page	
Naval Warfare Publication 1-03.1 Operational Reports; NKO/CID/IT page	
Naval Warfare Publication 5-01 Naval Operational Planning; NKO/CID/IT Page	
Naval Warfare Publication 6-01 Basic Operational Communication Doctrine; NKO/CID/IT page	
Operational Naval Instruction 3100.6 *NKO/CID/IT page*	
Navy/Marine Implementation of National Policy on Control of Compromising Emanation *OPNAVINST C5510.93F*	
Department of the Navy Security Classification Guides *OPNAVINST 5513.1*	
Navy Information Assurance Program *OPNAVINST 5239.1*	
Department of the Navy Personnel Security Program *SECNAV M-5510.30 Series*	
Department of the Navy Information Security Program *SECNAV M-5510.36*	
Department of the Navy Policy for Publicly Accessible World Wide Sites *SECNAV M-5720.47A*	

ALL PAYGRADES
VOLUNTARY EDUCATION

Note: Prior to considering any pursuit of off duty education or program enrollment visit your Navy College Office or call the Virtual Education Center (VEC).

You must complete the Tuition Assistance Workshop before your first course will be approved.

E1- E6: The workshop is available at your Navy College Office
E-7 and above: The Workshop is available at your Navy College Office
or
Complete the online course at the Navy College Website

How do I get started?

You already have. All your training up to this point is part of your Information Systems Technician Roadmap. Now that you have made the first steps you will need to sit down and formulate a plan. This plan will work best if you start out discussing your options with your Leading Chief Petty Officer, Leading Petty Officer, Mentor, or Career Counselor. They will help you understand all of the basics. Then your next stop is your Navy College Office. The counselors there will be able to help you formalize your plan and make sure that it makes sense for both you and the Navy. To aid you in your conversation with these professionals, here are a few questions that you may want to ask.

What credits do you have? What non-college courses have you taken? Where do you want to go? What field of study, or what kind of degree? What program will help me get there, Traditional or Online, What are my next steps: Transfer credits, Take exams, Have experience evaluated, Then lastly sign up for new courses?

RECOMMENDED OCCUPATIONAL-RELATED ASSOCIATE'S DEGREE FOR IT

Recommended Associates' degrees for the Seaman
Computer Science
Computer Information Systems
Computer Network Technology
Computer Programming
Computer Science Technology
Computer Systems Analysis
Information Technology
Networking Security Management
Computer Programming and Analysis
Computer and Information Science

RECOMMENDED OCCUPATIONAL-RELATED BACCALAUREATE/MASTERS DEGREE FOR IT

Recommended Bachelors/Masters degrees for the Seaman
Information Systems Management
Computer Information Science
Computer Science
Computer Information Systems
Computer Engineering
Software Engineering
Computer Forensics
Computer Networking
Information Assurance
Information Systems Security
Information Technology
Network Management
Network Security

GENERAL INFORMATION ON VOLUNTARY EDUCATION

The Navy College Program & Web Page:

The Navy College Program (NCP) provides opportunities to Sailors to earn college degrees by providing academic credit for Navy training, work experience, and off-duty education. The NCP mission is to enable Sailors to obtain a college degree while on active duty. In support of the four R's- Recruiting, Readiness, Retention, and Respect, the NCP signifies Navy's commitment to education by improving enlistment appeal, demonstrating Navy service and achieving a college degree are compatible, helping Sailors apply themselves to new situations and challenges and better preparing them for advancement, building up Sailors' self-image, and producing higher quality Sailors. More information is available online at: https://www.navycollege.navy.mil

Navy College Program Distance Learning Program (NCPDLP)

The Navy College Program (NCP) has developed partnerships with colleges and universities to offer rating relevant degrees via distance learning to Sailors everywhere. These new education partnerships provide associates and bachelors degree programs relevant to each rating, and make maximum use of military professional training and experience to fulfill degree requirements. The program also provides opportunities to take courses through distance learning so that Sailors anywhere will be able to pursue a degree. Courses are offered in a variety of formats, such as CD-ROM, videotape, paper, or over the Internet. Contact your Navy College Office or the Navy College Center about degree programs available from your partnership schools.

Servicemembers Opportunity College Degree Network System (SOC DNS):

The SOC DNS consists of accredited colleges offering specific associate's and bachelor's degrees (while limiting academic residency) to Sailors, Marines, Soldiers and members of the Coast Guard worldwide. Colleges taking part in each curriculum area guarantee acceptance of one another's courses as identified by SOC DNS Course Category Codes. The "home" college (the SOC DNS college from which the student wishes to graduate) issues an official Student Agreement to all eligible students after the completion of the sixth semester hour and a complete evaluation of the servicemember's prior learning, including courses from other colleges and universities, military training and occupational experience, nationally-recognized tests, and other non-traditional credit. The SOC DNS Student Agreement is a contract-for-degree that protects the eligible student from changes to his or her degree program. It is a comprehensive long-range degree plan that lists all of the course requirements, but does not require that all courses be taken with that college. More information is available online at: http://www.soc.aascu.org/socdns/

Tuition Assistance (TA):

TA provides funds for eligible active-duty personnel to attend approved educational institutions on an off-duty basis to earn a high school diploma, vocational/technical certificate, or college degree. TA pays for tuition and fees directly associated with the course of instruction. TA will pay for the following amounts per fiscal year: 16 semester hours, not-to-exceed $250/credit or 24 quarter hours, not-to-exceed $166.67/credit or 240 clock hours (CH), not-to-exceed $16.67/CH or a combination of semester and quarter hours.

Joint Service Transcripts (JST)

JSTs are official military transcripts which are used by colleges to validate your actual credited training. Every Sailor has a transcript already and access to it is free. More information is available online at: https://jst.doded.mil/

The American Council on Education (ACE)

ACE has reviewed every course listed in the OCCUPATIONAL Roadmap and determined what type of collegiate level credit is recommended. The ACE identifier, listed with each course, is a source to validate the information and to check for changes as they occur. Updates can be found at http://www.militaryguides.acenet.edu.

Vocational Certificates

Vocational Certificates are available from most community colleges. Most of your military training can be counted toward their degree programs, but they will still require residency credits and approximately 40-75 credit hours. These certificates can be as valuable as the apprenticeship program in the civilian work force.

College credits by Testing CLEP, DSST

Testing can replace the requirement to attend most of the college courses listed in the Occupational Roadmap. Base Education Centers offer CLEP and DSST exams for active duty military at no cost. They also offer a comprehensive list of "credit-by-exam" tests. Additionally, many of the tests have study guides available. These tests are available at the base education center or through the base library system.

DANTES (DSST) http://www.dantes.doded.mil/DANTES_WEB/EXAMINATIONS/DSST.htm
CLEP Exams http://www.collegeboard.com/student/testing/clep/about.html

SAMPLE DEGREE PLAN

Computer Engineering Technology Bachelor's Degree Curriculum

Course Name	Theory	Lab	Credits
Fundamentals of DC Circuits	3	0	3
DC Circuits Lab	0	1	1
Precalculus	3	0	3
Engineering and Ethics	3	0	3
General Chemistry	3	1	4
Communication Elective	3	0	3
Fund of AC Circuits	3	0	3
AC Circuits Lab	0	1	1
Depth Requirement Elective	3	0	3
Programming Essentials	3	0	3
Communication Elective	3	0	3
Behavioral & Soc Science Elective	3	0	3
Electronics I	3	0	3
Electronics I Lab	0	1	1
Behavioral & Soc Science Elective	3	0	3
Communication Elective	3	0	3
Behavioral & Soc Science Elective	3	0	3
Humanities & Fine Arts Elective	3	0	3
Programming in C	3	1	4
Digital Electronics	3	0	3
Digital Electronics Lab	0	1	1
American Government I	3	0	3
Physics I	3	1	4
Physics II	3	1	4
Microprocessor Sys Engr	3	0	3
Microprocessor Sys Lab	0	1	1
Electronics II	3	0	3
Electronics II Lab	0	1	1
Programming in C++	3	1	4
Calculus I	4	0	4
Analog Integrated Cir	3	0	3
Integrated Circuits Lab	0	1	1

Computer Networks	3	0	3
Advanced Microprocessors	3	0	3
Adv Microprocessors Lab	0	1	1
Calculus II	4	0	4
Signals and Systems Theory	3	0	3
Signals and Systems Lab	0	1	1
Modern Digital Design	3	0	3
Modern Digital Design Lab	0	1	1
Elective w/Lab 300 level or higher	3	1	4
Technical Project Management	3	0	3
Capstone Project	3	0	3
Elective w/Lab 300 level or higher	3	1	4
Elective 200 level or higher	3	0	3
TOTAL HOURS	**107**	**17**	**124**

REFERENCES

Navy Enlisted Learning and Development Programs:

- Learning and Development Roadmap for Enlisted Sailors, OPNAVINST 1500.77(series)
- Navy Enlisted Retention and Career Development Program, OPNAVINST 1040.11(series)
- Career Counselor Handbook, NAVPERS 15878K
- Command Sponsor and Indoctrination Programs OPNAVINST 1740.3(series) (Sponsor assigned within 10 days of orders received / Indoctrination completed as soon as possible and practicable but NLT 90 days)
- Command Sponsorship of Dependents at Overseas Duty Stations MILPERSMAN 1300-150 to 1300-210
- Guaranteed Assignment Retention Detailing Program (GUARD 2000), MILPERSMAN 1306-1002/1004
- Navy Enlisted Warfare Qualification Programs OPNAVINST 1414.9 (series)
- Master Training Specialists (MTS) Program NETCINST 1500.2(series)
- Command Master Chief Program OPNAVINST 1306.2 (series)

Reenlistments and Extensions:

- Agreement of Enlisted Naval Reservist, and Fleet Reservists Inductees to Remain on Active Duty MILPERSMAN 1160-060
- Extension of Enlistments MILPERSMAN 1160-040
- Overseas Tour Extension Incentives Program (OTEIP) MILPERSMAN 1306-300
- Consecutive Overseas Tours (COT) Leave Travel Entitlement Policy MILPERSMAN 1050-410
- Perform to Serve (PTS) MILPERSMAN 1440-060
- Reenlistment Ceremony MILPERSMAN 1160-020
- Leave of Military Personnel MILPERSMAN 1050-040
- Required Counseling Upon Enlistment and Reenlistment MILPERSMAN 1160-031
- Selective Reenlistment Bonus (Use Latest SRB NAVADMIN)
- Selective Training and Reenlistment (STAR) Program MILPERSMAN 1160-100
- Assignment to School as a Reenlistment Incentive MILPERSMAN 1306-1006

Fleet Reserve and Retirements:

- Casualties and Survivor Benefits (SBP) MILPERSMAN 1770-010 to 1770-280 OPNAVINST 1750.5(Series)
- Disability Retirement MILPERSMAN 1850-010 to 1850-040
- Fleet Reserve and Retirement MILPERSMAN 1800-010 to 1800-070
- Privately Owned Vehicle (POV) Shipment Entitlement Policy and Household Goods (HHG) Shipment and Storage Entitlement Policy MILPERSMAN 4050-010 to 4050-020
- Permissive Temporary Duty (PTDY) Authorization for Job/House Hunting MILPERSMAN 1320-220
- Transition Assistance Management Program (TAMP) OPNAVINST 1900.2(series) (Initiate a DD-2648-1 NLT 90 Days Prior to Separation and attend workshop 12 months prior to separation/Fleet Reserve/Retirement date)

Enlisted Administrative Separations:

- Separation by Reason of Alcohol Rehabilitation Failure MILPERSMAN 1910-152
- Separation by Reason of Misconduct -Drug Abuse MILPERSMAN 1910-146
- Separation by Reason of Convenience of the Government -Early release to further education MILPERSMAN 1910-108
- Administrative Separation (ADSEP) Policy and General Information MILPERSMAN 1910-010 to 1910-812
- Fraudulent Enlistment MILPERSMAN 1910-134
- High Year Tenure (HYT) MILPERSMAN 1160-120
- Misconduct (various reasons) MILPERSMAN 1910-138/140/142
- Department of the Navy (DON) Policy on Parenthood and Pregnancy SECNAVINST 1000.10(series) & MILPERSMAN 1910-124
- Separation by Reason of Convenience of the Government -Personality Disorder MILPERSMAN 1910-122
- Separation by Reason of Physical Fitness Assessment (PA) Failure MILPERSMAN 1910-170
- Separation by Reason of Misconduct - Commission of a Serious Offense MILPERSMAN 1910-142
- Separation by Reason of Unsatisfactory Performance MILPERSMAN 1910-156

Advancement & Service Schools:

- Advancement Manual for Enlisted Personnel of the U.S. Navy and U.S. Navy Reserve BUPERSINST 1430.16(series)
- Accelerated Advancement of Recruit Training Class "A" School Graduates, and Ceremonial Guard MILPERSMAN 1430-010
- Enlisted to Officer Commissioning Program Application & Administration Manual OPNAVINST 1420.1(series)
- Service Schools MILPERSMAN 1306-600/602/604/608
- Class "A" School & Rating Entry Requirements MILPERSMAN 1306-618
- Retesting with Armed Forces Classification Test (AFCT) version of the Armed Services Vocational Aptitude Battery (ASVAB) MILPERSMAN 1236-010
- Professional Apprenticeship Tracks Program (PACT) NAVADMIN 318/07

Education:

- Joint Chiefs Professional Military Education (PME) Manual 1805.01
- Voluntary Education (VOLED) for Navy Sailors OPNAVINST 1560.9(series)
- Navy Voluntary Education Program NETCINST 1560.3(series)
- Navy Credentialing Programs OPNAVINST 1540.56
- Administration of the United Services Military Apprenticeship Programs (USMAP) OPNAVINST 1560.10(series)

Other Quick References:

- Awards Manual (SECNAVINST 1650.1(Series)
- Change in Rating MILPERSMAN 1440-010 to 1440-040
- Department of the Navy Correspondence Manual (SECNAV M-5216.5
- Navy Alcohol and Drug Abuse Prevention and Control OPNAVINST 5350.4(series)
- Exchange of Duty (SWAPS) MILPERSMAN 1306-700
- First-Term Personnel Assignment Policy MILPERSMAN 1306-126
- Individual Augmentation (IA) Policy and Procedures OPNAVINST 1001.24(series)
- Military Couple and Single Parent Assignment Policy MILPERSMAN 1300-1000
- Military Pay MILPERSMAN 7220-010 to 7220-410
- Navy Performance Evaluation System BUPERSINST 1610.10 (Series)
- Overseas Extensions MILPERSMAN 1300-310
- Physical Readiness Program OPNAVINST 6110.1(series) / MILPERSMAN 6100-6199
- Reassignment for Humanitarian Reasons (HUMS) MILPERSMAN 1300-500
- Standardization Policy and Procedures for the Active Duty for Special Work (ADSW) Program OPNAVINST 1001.20(series)
- Operational Risk Management OPNAVINST 3500.39C
- Personnel Qualification Standards (PQS) Catalog NAVEDTRA 43100-6M